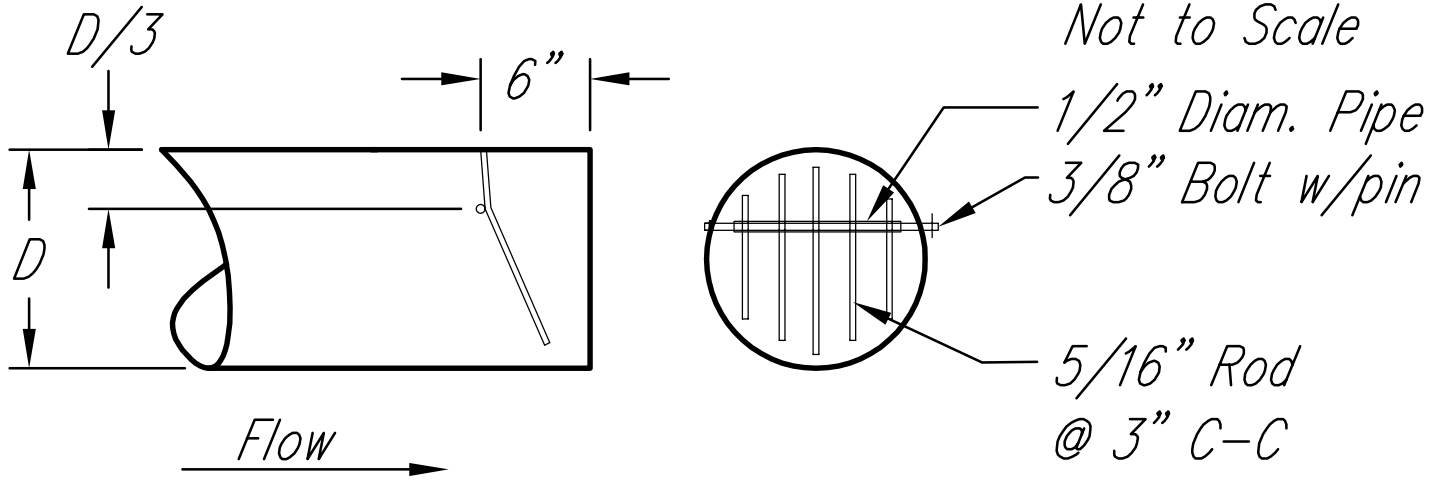

ANIMAL GUARD DETAIL