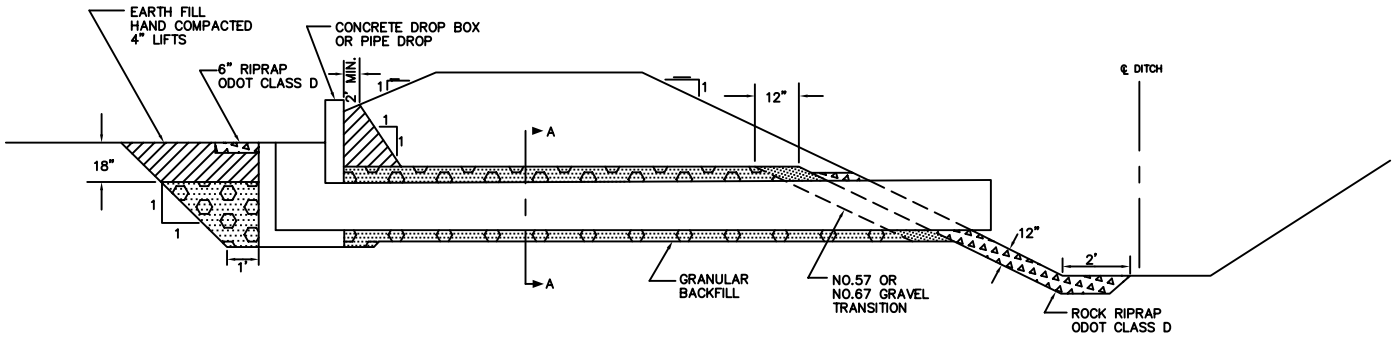

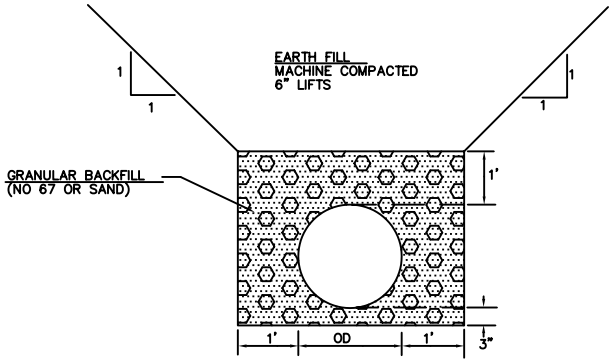

SECTION A–A

NOT TO SCALE

QUANTITIES	
Rack Riprap	C.Y.
Gradation ODOT 601D	
Granular Backfill	
Sand	C.Y.
No. 67 Gravel	C.Y.
Hand Compacted Backfill	C.Y.

STRUCTURE BACKFILL
GRANULAR MATERIAL

U.S. DEPARTMENT OF AGRICULTURE
SOIL CONSERVATION SERVICE

STANDARD DRAWING NO.: OH-N-202-CAD
APPROVAL DATE: 01/23/85

REVISIONS:

	Date		
Designed		Approved by	
Drawn D.W. Whited	6/8	Title	
Traced		Title	
Checked		Sheet No. of	Drawing No.

Description: STRUCTURE BACKFILL, GRANULAR MATERIAL

Filename: OH020285.DWG