REPRODUCED WITH PERMISSION FROM:
Concrete Manure Storages Handbook,
MWPS-36
1st EDITION, 1994
© MIDWEST PLAN SERVICE
AMES, IA 50011-3080

NOTES:
1– CONCRETE COMPRESSIVE STRENGTH, f'c, SHALL BE:
Beams, Walls, Floors, Footings– 4,000 psi
Slats – 4,500 psi
2– REINFORCING STEEL SHALL BE GRADE 60.
3– CONCRETE COVER OVER REINFORCING STEEL SHALL BE 2" CLEAR EXCEPT FOR SLATS WHICH SHALL BE 1.5". WHEN FORMED AGAINST EARTH, COVER SHALL BE 3" CLEAR.
4– FOR ADDITIONAL DETAILS, SEE SHEET __.

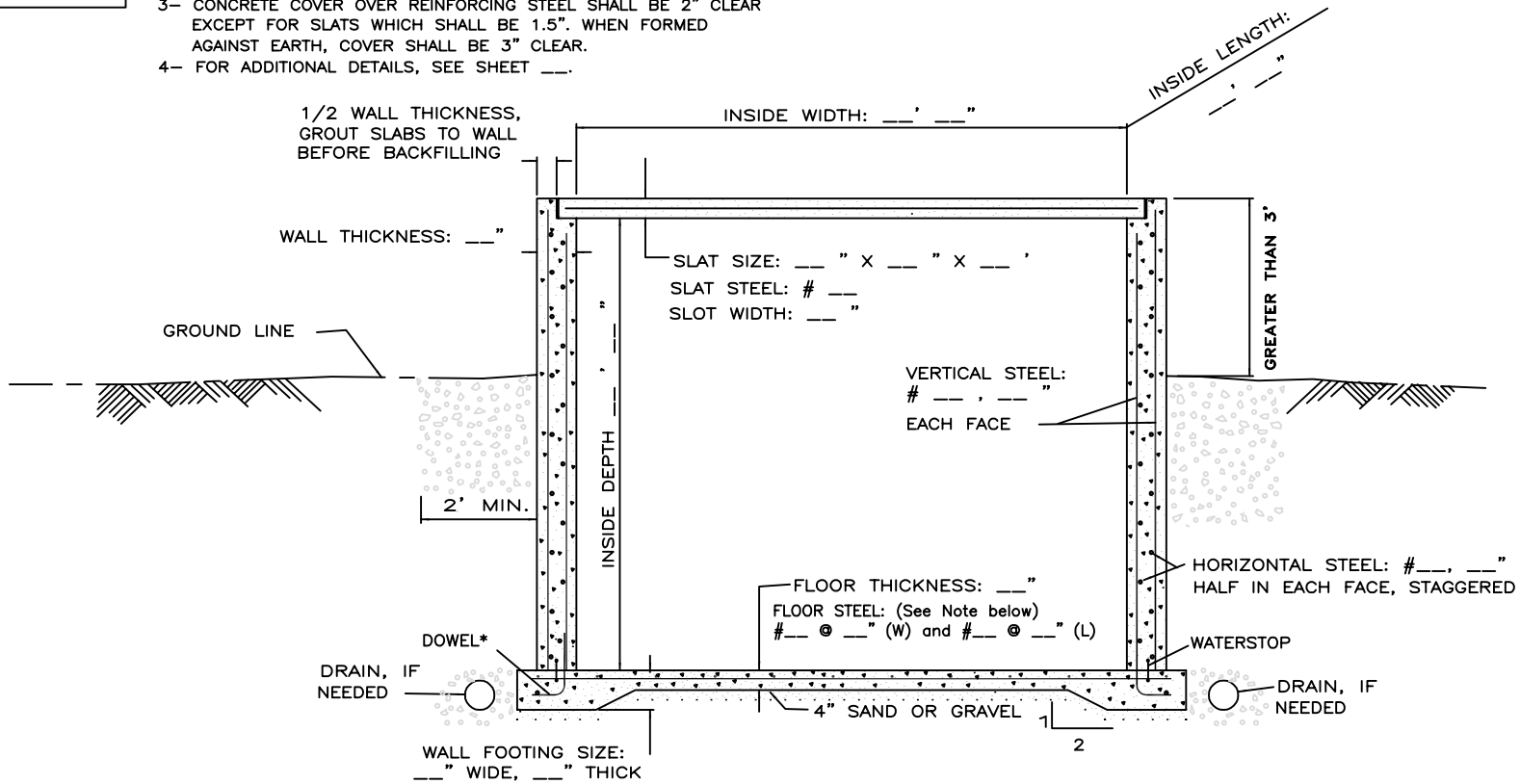

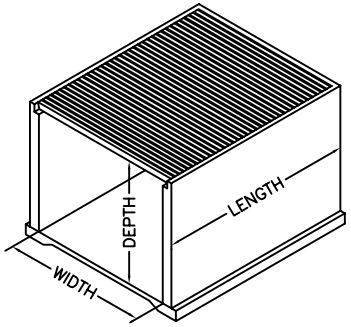

* DOWELS (DEFORMED REINFORCING STEEL)
OPTION 1: EXTEND 12" OF VERTICAL STEEL INTO FOOTING.
EXTEND STEEL VERTICALLY INTO THE FOOTING WITHIN 3" OF FOOTING BOTTOM, THEN BEND 90°.
OPTION 2: USE A 24" LONG BAR, EQUIVALENT TO THE VERTICAL STEEL.
TIE 12" OF THE DOWEL TO THE VERTICAL STEEL.
EXTEND VERTICALLY INTO THE FOOTING WITHIN 3" OF FOOTING BOTTOM, THEN BEND 90°.

FLOOR THICKNESS AND STEEL:
THE FLOOR SLAB THICKNESS AND REINFORCING STEEL REQUIREMENTS SHALL BE AS SPECIFIED IN THE NRCS–OHIO CONSTRUCTION SPECIFICATION "CONCRETE".

NOT TO SCALE

STANDARD DRAWING NO.: OH-N-511-CAD
APPROVAL DATE: 7/25/00
REVISIONS:

Date
Designed
Drawn
Checked
Approved

RECTANGULAR TANK WITH SLATS AND GREATER THAN 3 FEET EXTENDED ABOVE GROUND

USDA NRCS Natural Resources Conservation Service

File No. oh051100.dwg
Drawing No.
Sheet of

Description: RECTANGULAR TANK W/SLATS & GREATER THAN 3 FT. EXTENDED ABOVE GROUND

Filename: OH051100.DWG

OHIO NRCS TRI-STATE DESIGN TEAM