OUTLET PIPE INSTALLATION

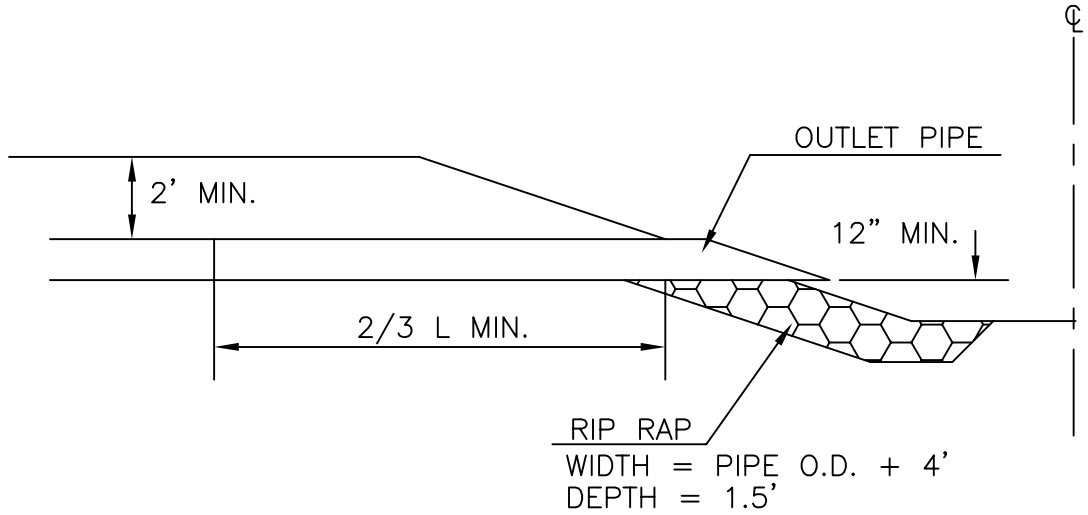

Description: TILE OUTLET PIPE INSTALLATION

Filename: OH600593.DWG