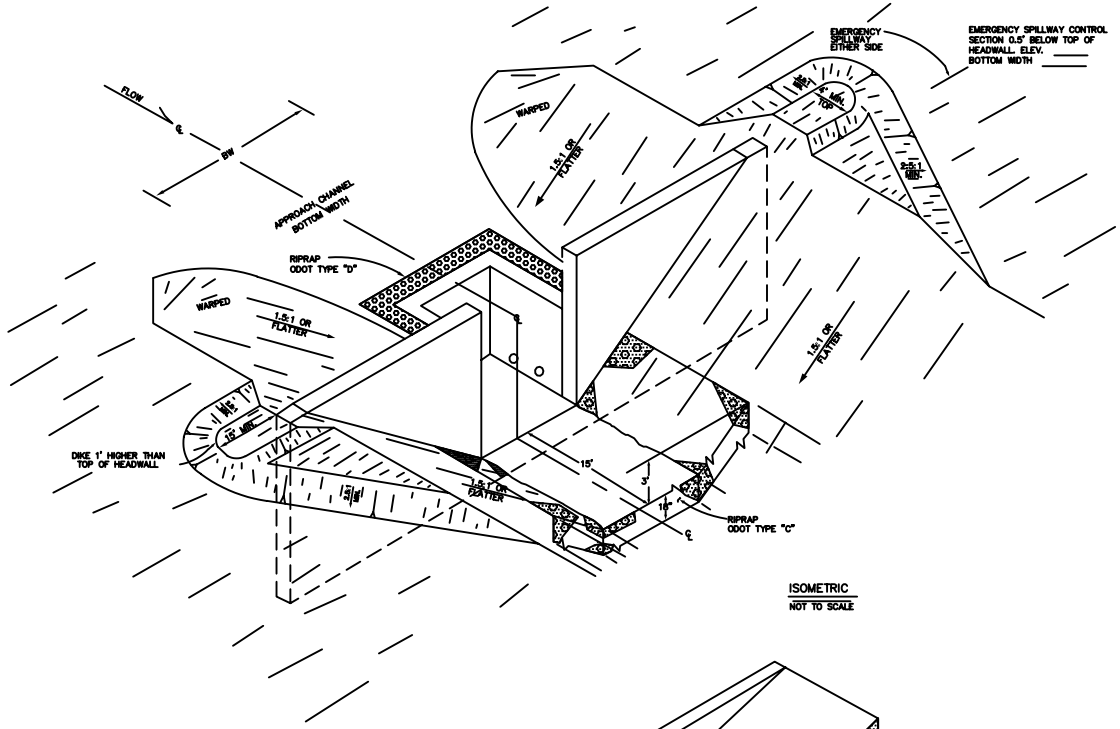

ISOMETRIC
NOT TO SCALE

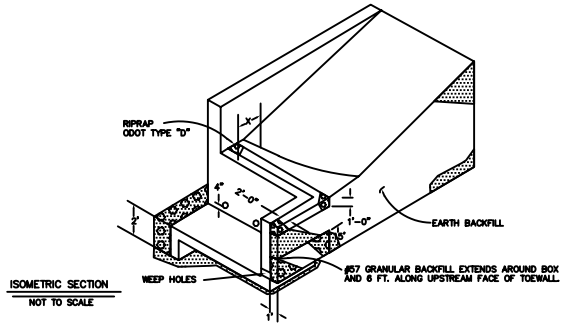

ISOMETRIC SECTION
NOT TO SCALE

QUANTITIES		
CONCRETE	____	CY
REINFORCING STEEL	____	LBS
DRAIN FILL #57	____	CY
RIPRAP TYPE D	____	CY
TYPE C	____	CY
EARTHMOVING	____	CY
SEEDING	____	AC

REINFORCED CONCRETE
DROPBOX SPILLWAY

U.S. DEPARTMENT OF AGRICULTURE
SOIL CONSERVATION SERVICE

STANDARD DRAWING NO.: OH-N-300-CAD
APPROVAL DATE: 04/84

REVISIONS:
REV. #1: 09/84

		Date		
Designed			Approved by	
Drawn	D.W. Winted	9/84	Title	
Traced			Title	
Checked			Sheet No. of	Drawing No.

Description: DROP BOX SPILLWAY, REINFORCED CONCRETE, ISOMETRIC

Filename: OH030084.DWG