MARYLAND STANDARDS FOR AGRICULTURAL BMPS
DETAIL CW - 3.3.1L 3' Concrete L Wall with backfill limits of 1 to 3 feet

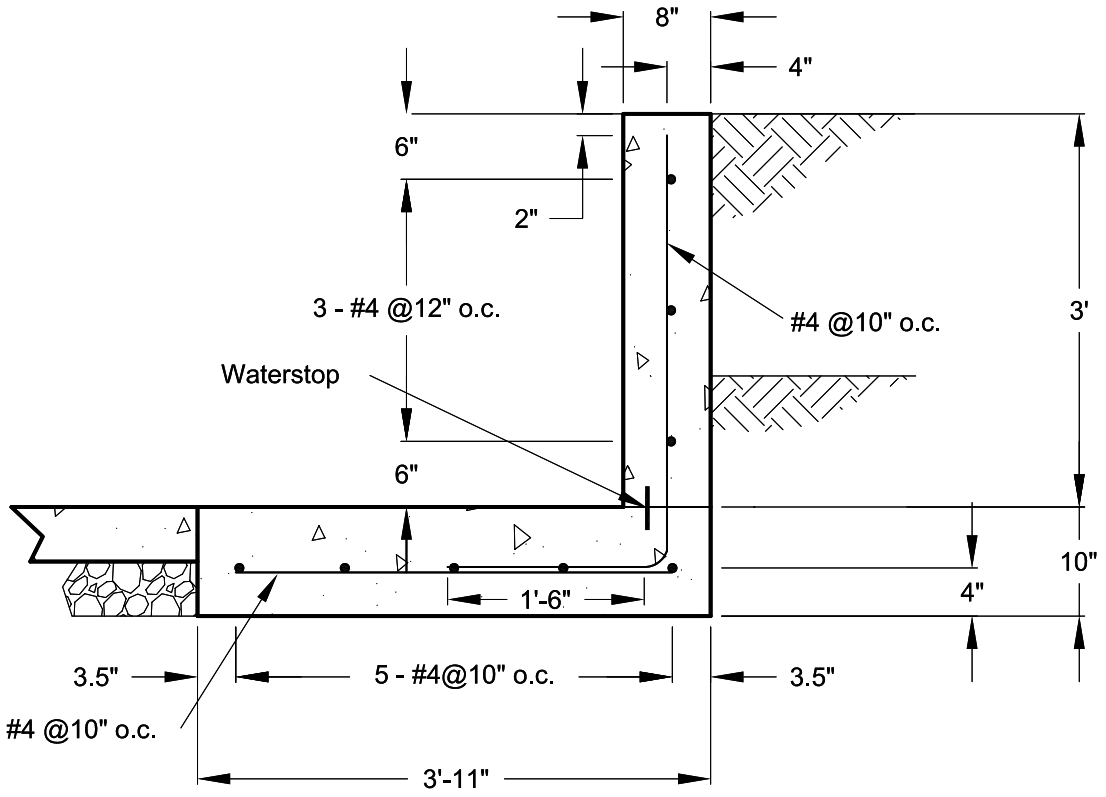

3' RETAINING WALL
CW-3.3.1L
NTS

Notes:
1) 4000 psi concrete
2) Grade 60 steel
3) Maximum backfill top of wall (3')
4) Minimum backfill 1'
5) Concrete slab must be placed before wall is backfilled
6) Maximum surcharge 100 PSF

U.S.DEPARTMENT OF AGRICULTURE NATURAL RESOURCES CONSERVATION SERVICE	CW-3.3.1L.DWG	MARYLAND DEPARTMENT OF AGRICULTURE MARYLAND SOIL CONSERVATION DISTRICTS