FOOTING DESIGN

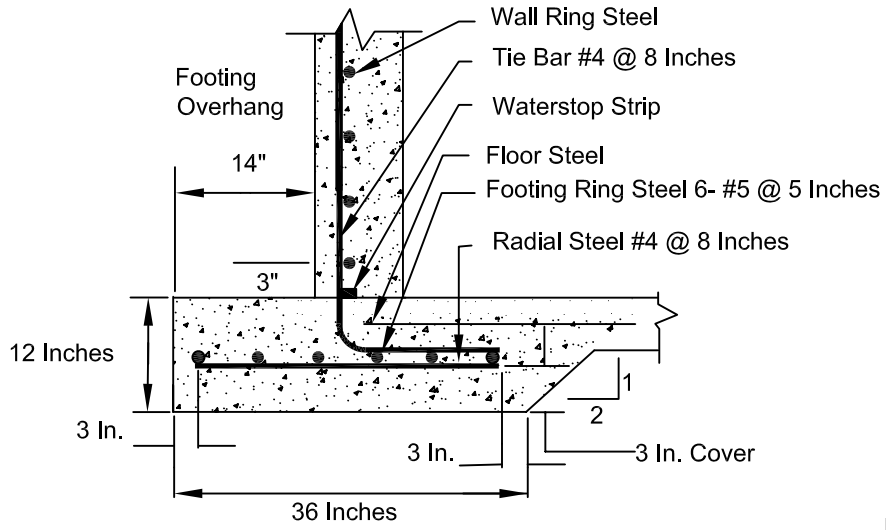

TIE BAR

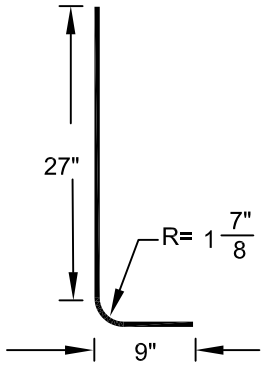

NOTE: Subsurface Drainage must be provided around the storage facility.

WALL DESIGN

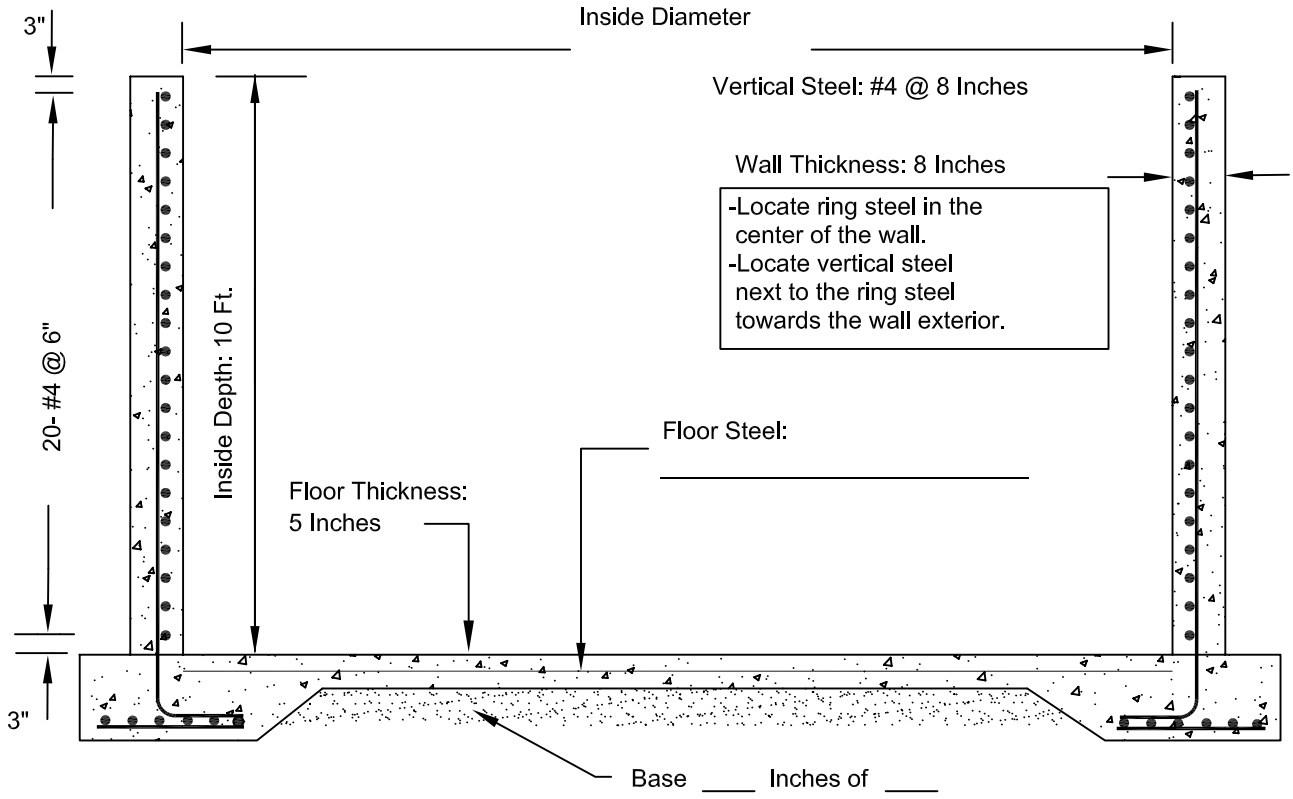

N.T.S.

NRCS MARYLAND	CIRCULAR CONCRETE STORAGE FACILITY FOR USE WITH NOTCHED WALL AND RAMP 10' DEEP 120' OR LESS IN DIAMETER	ISSUE DATE: 12/04 DRAWING NO. NCT-10-120