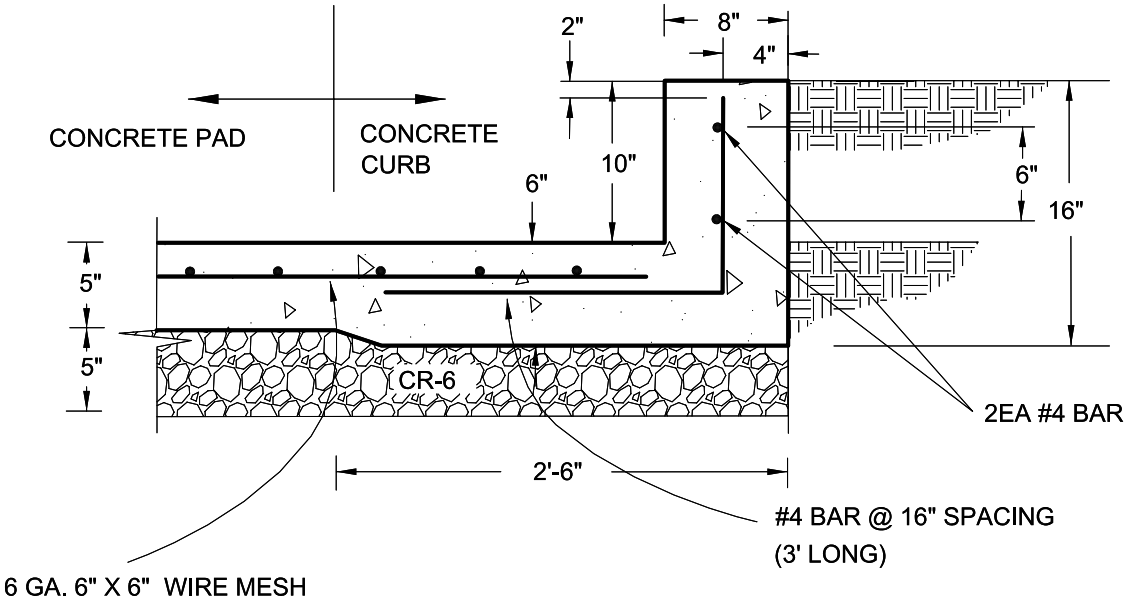

10" CONCRETE CURB

CC-1.1.0L
NTS

Notes:
1) 4000 psi concrete
2) Grade 60 steel
3) Maximum backfill to top of curb (1')
4) Minimum backfill to top of floor

NRCS	U.S. Department of Agriculture Natural Resources Conservation Service Maryland	Drawing: CC-1.1.0L Issue: