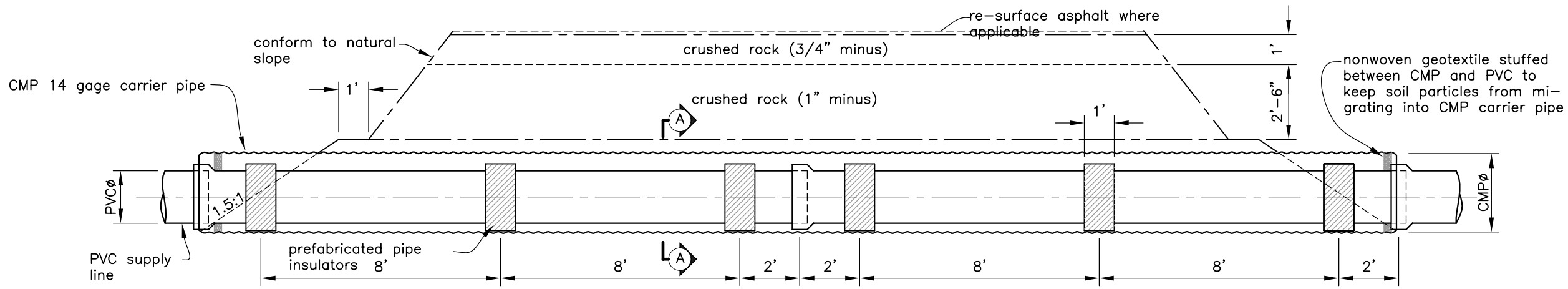

ROAD CROSSING

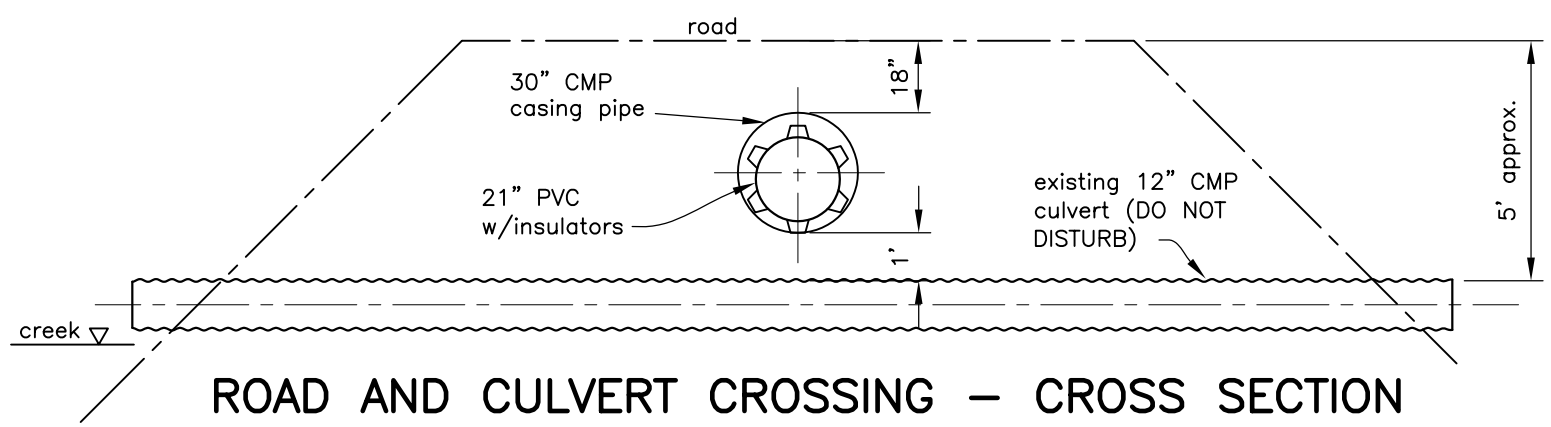

ROAD AND CULVERT CROSSING – CROSS SECTION

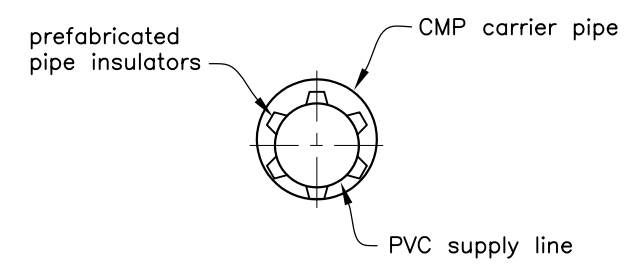

SECTION A

NOTE: Insulators shall provide a clear distance between pipe bell and casing wall.

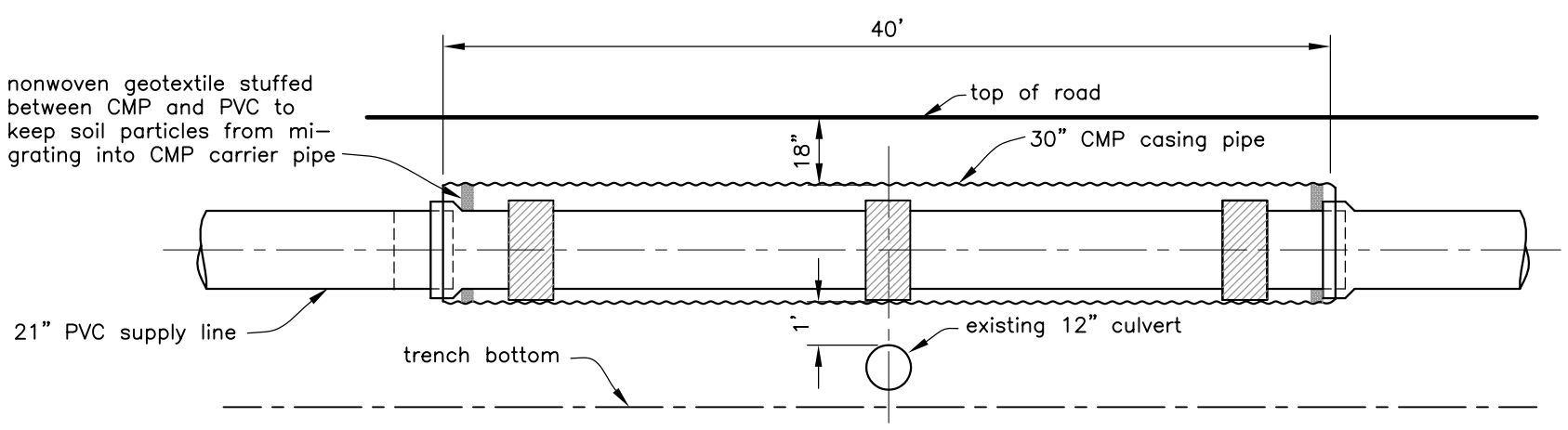

ROAD AND CULVERT CROSSING – PROFILE

This drawing requires supporting technical documentation prior to use and must be adapted to the specific site.

Drawing not to scale.

Date 9/2005
Designed
Drawn
Checked
Approved
Title

ROAD CROSSING

IRRIGATION

NRCS
Natural Resources Conservation Service
United States Department of Agriculture

File Name or_pipe_road_xing.dwg
Drawing No.
Sheet of