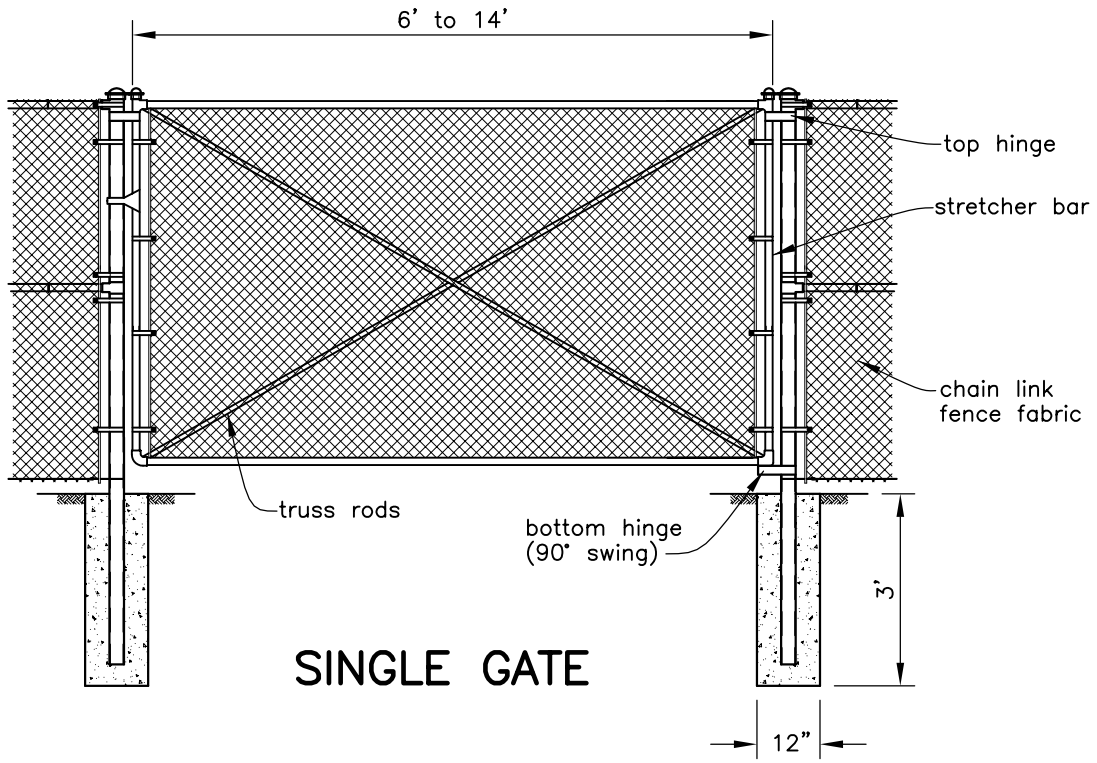

SINGLE GATE

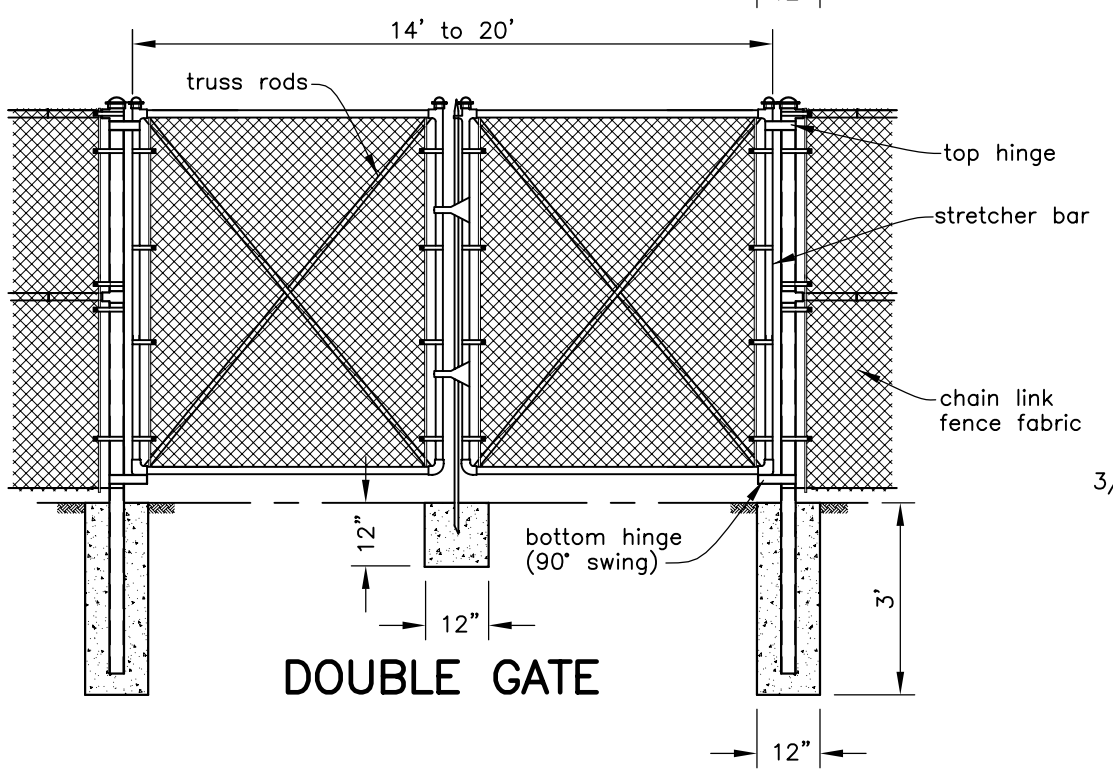

DOUBLE GATE

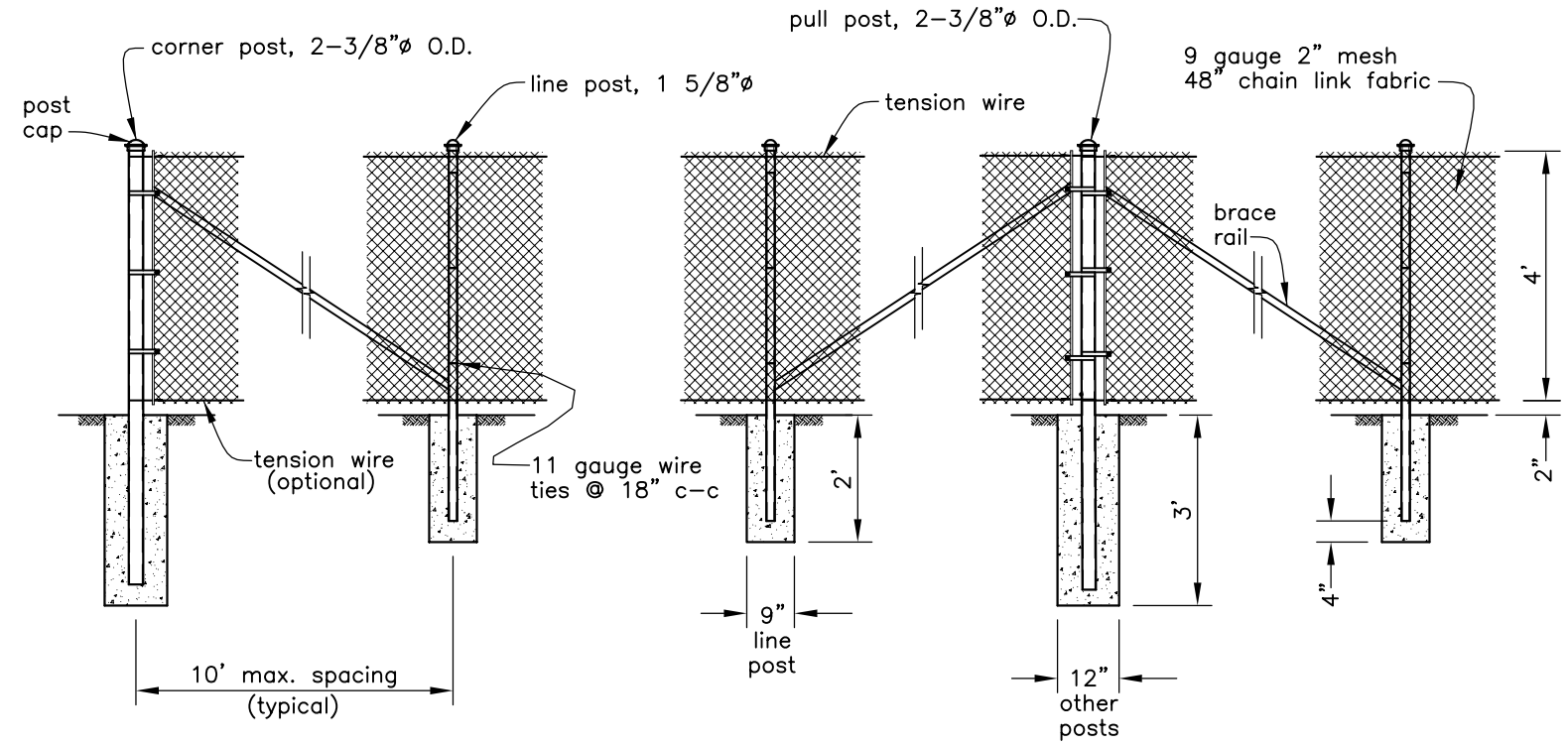

ELEVATION VIEW

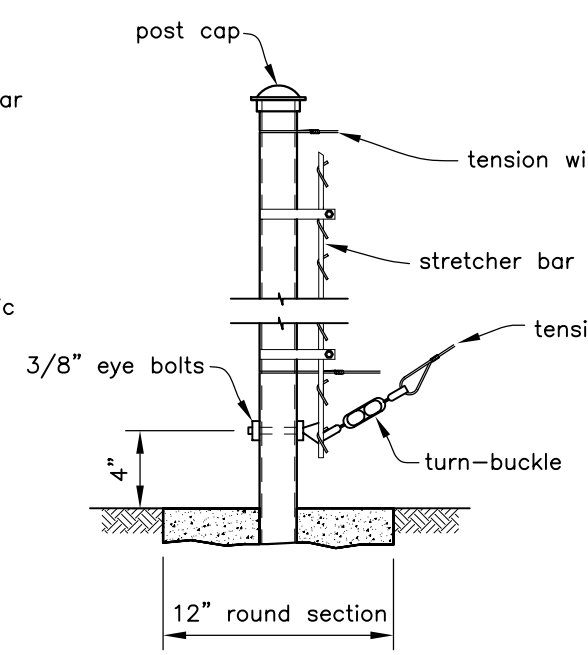

END POST
GATE POST
CORNER POST

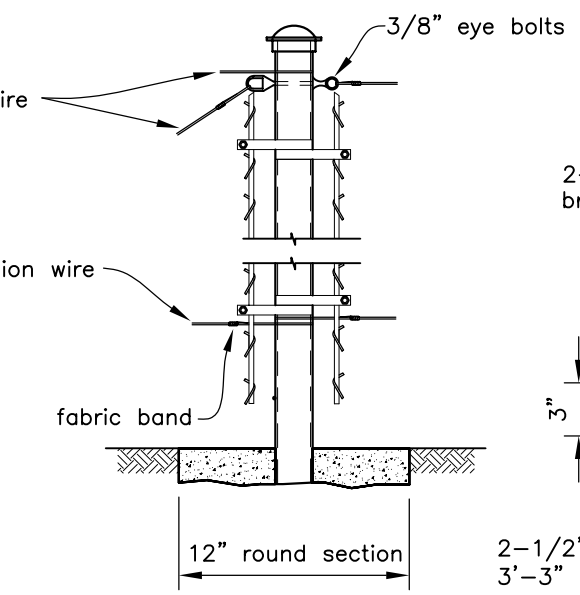

PULL POST

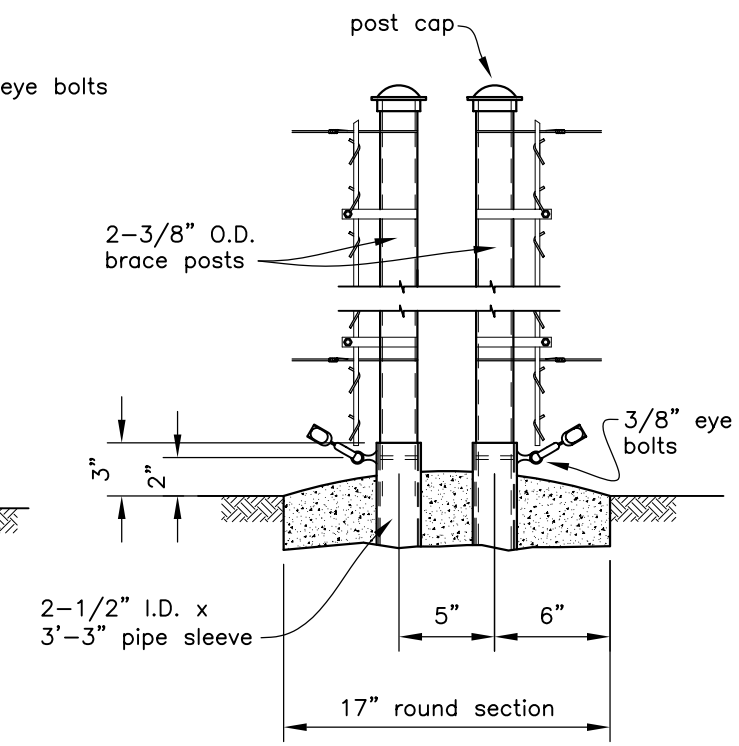

BRACE POST DETAIL

Concrete shall be class 3000. Concrete for line posts to be 9" min. diameter. Concrete for all other posts to be 12" min. diameter.

This drawing requires supporting technical documentation prior to use and must be adapted to the specific site.

Drawing not to scale.

Date 7/05
Designed
Drawn
Checked
Approved
Title

4 FT CHAIN LINK FENCE

NRCS
Natural Resources Conservation Service
United States Department of Agriculture

File Name
or_chainlink.dwg
Drawing No.
Sheet of

C:\home\CAD Drawings\(c)Livestock_Facilities2006\Fences\Chain_Link\or_chainlink.dwg, 1/27/2006 9:44:24 AM

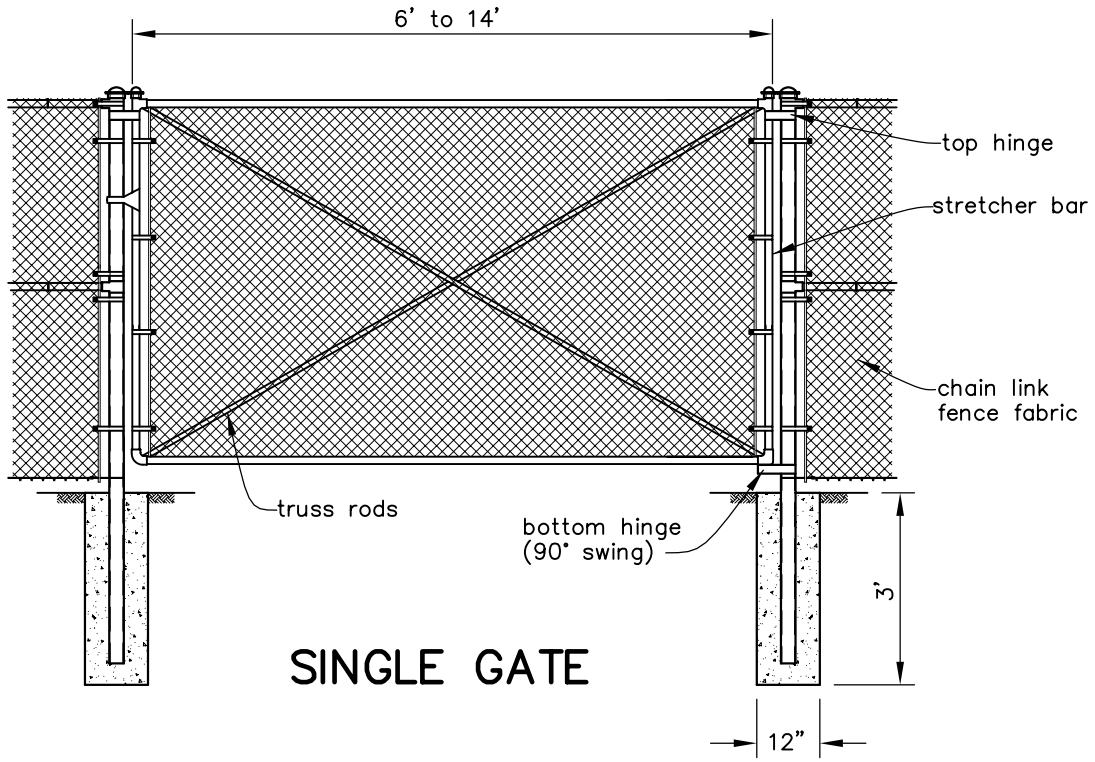

SINGLE GATE

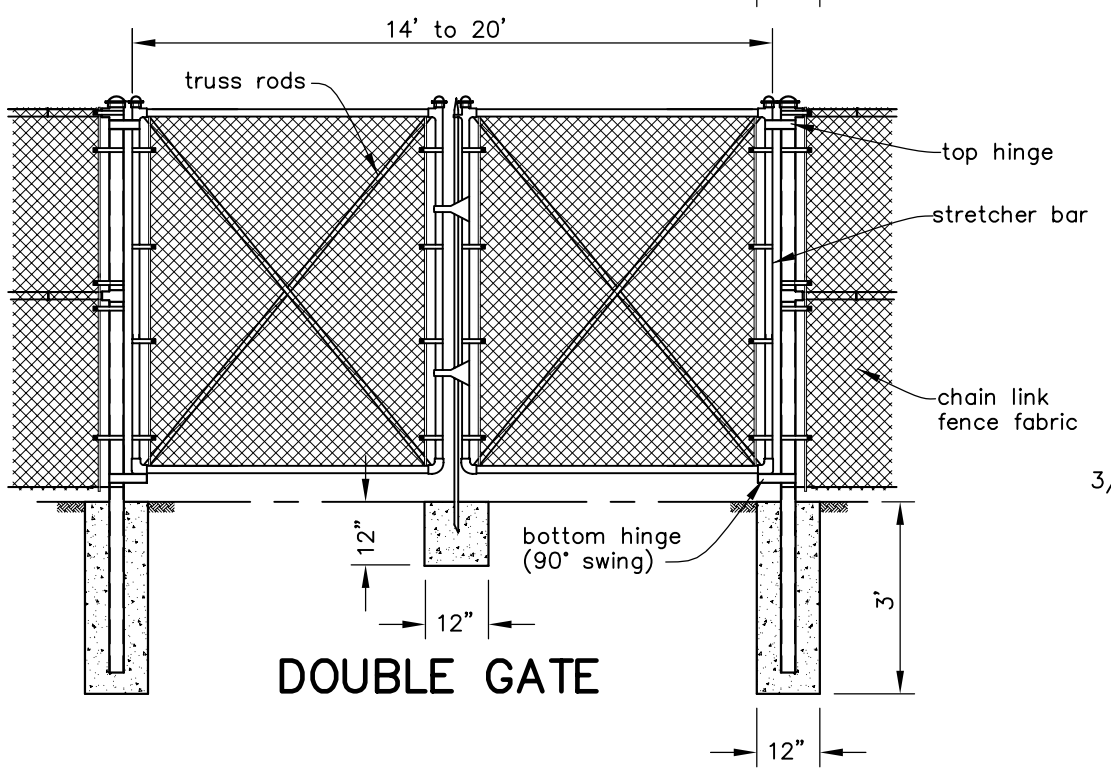

DOUBLE GATE

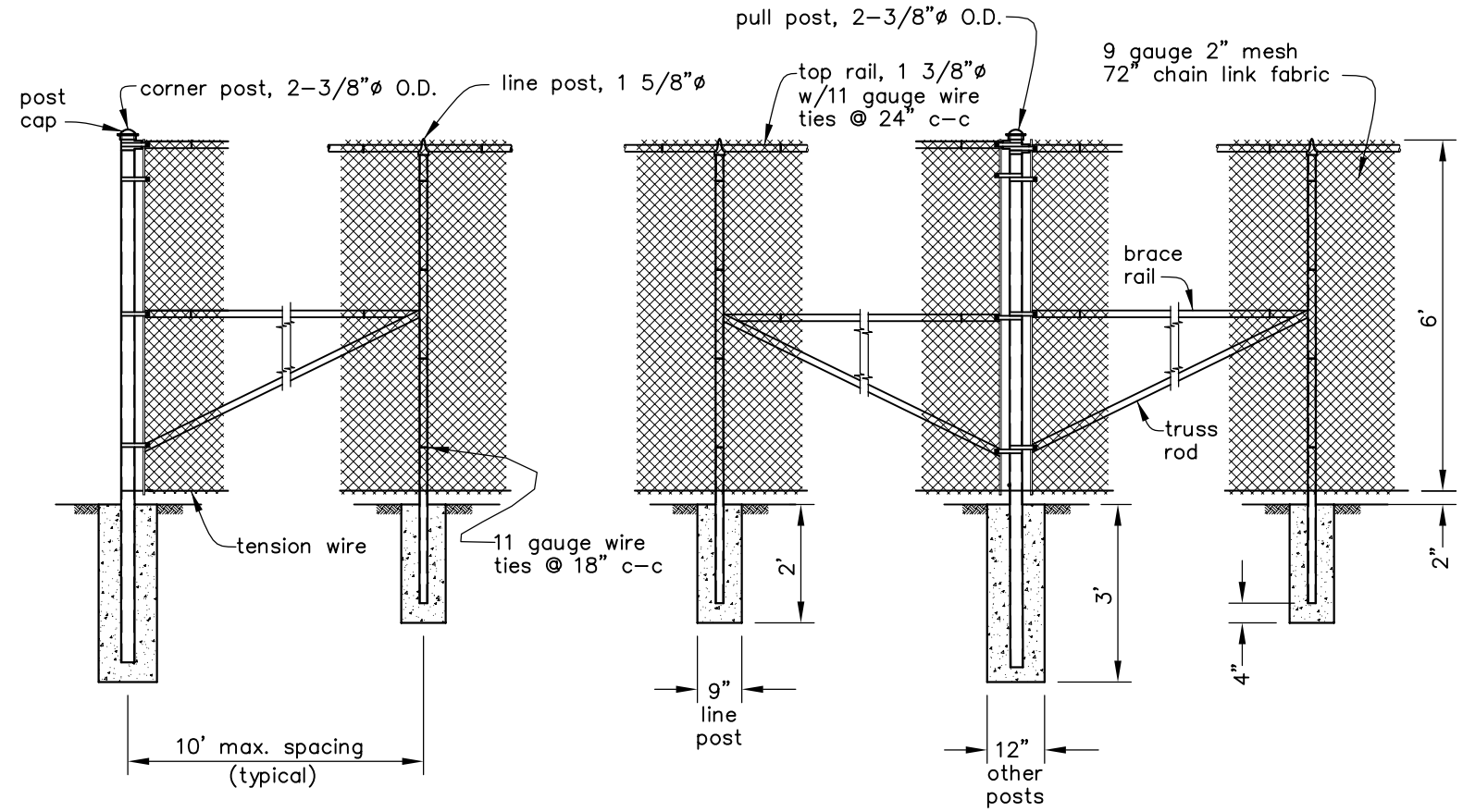

ELEVATION VIEW

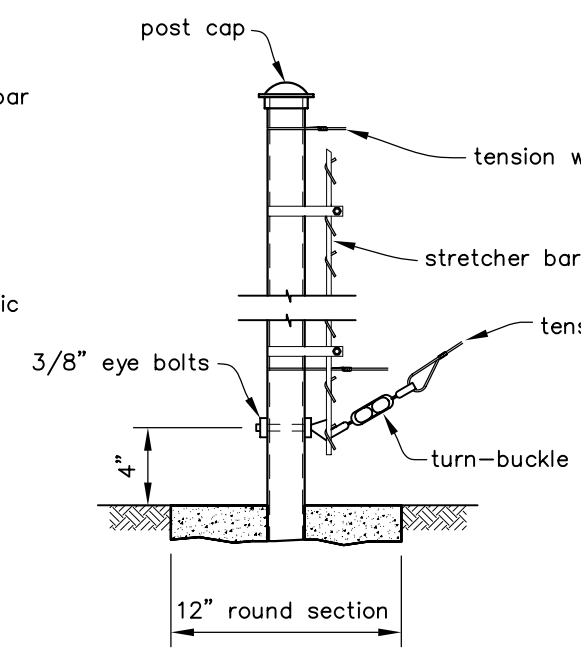

END POST
GATE POST
CORNER POST

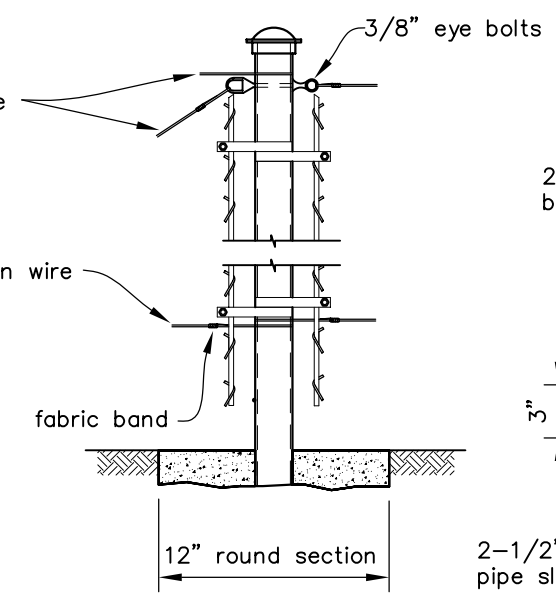

PULL POST

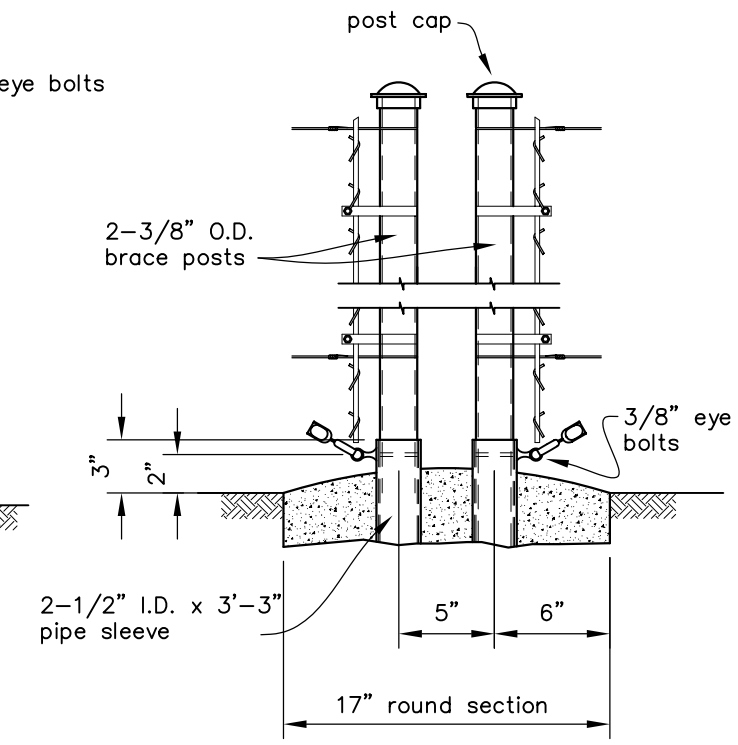

BRACE POST DETAIL

Concrete shall be class 3000. Concrete for line posts to be 9" min. diameter. Concrete for all other posts to be 12" min. diameter.

This drawing requires supporting technical documentation prior to use and must be adapted to the specific site.

Drawing not to scale.

Date 7/05
Designed
Drawn
Checked
Approved
Title

6 FT CHAIN LINK FENCE

NRCS
Natural Resources Conservation Service
United States Department of Agriculture

File Name
or_chainlink.dwg
Drawing No.
Sheet of