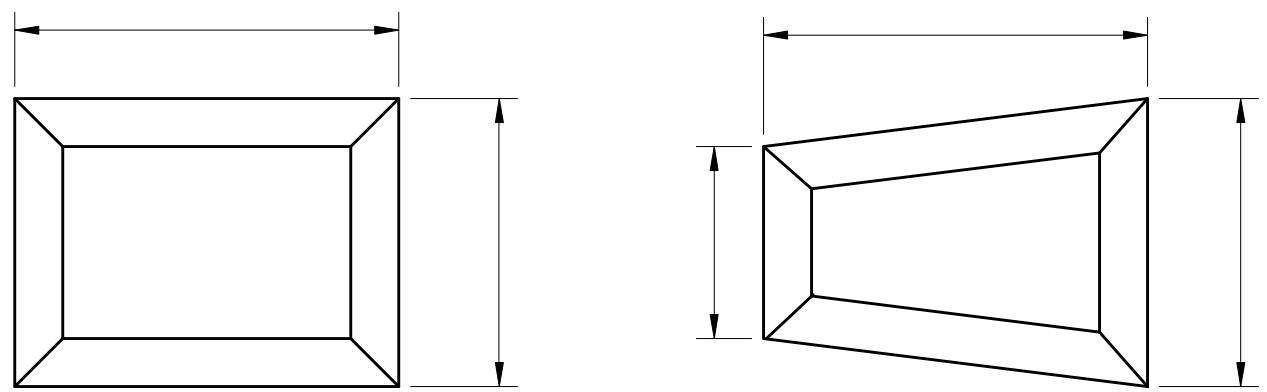

TYPE OF POND

(omit one)

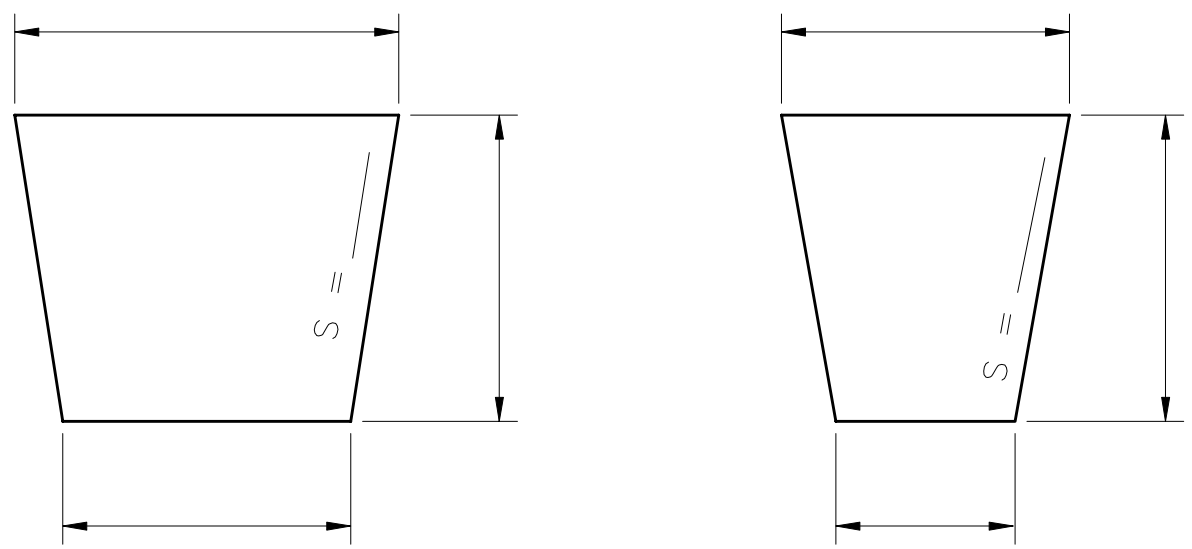

Side View

End View

CROSS SECTION

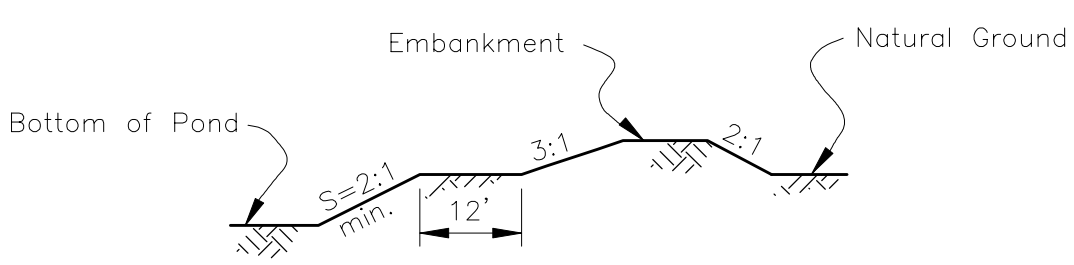

DETAIL

TECHNICAL DATA

STORAGE:

Capacity _____ Ac.–ft.

_____ Gallons

Surface Area _____ Acres

Maximum Depth _____ Feet

Annual Yield _____ Ac.–ft.

EXCAVATION _____ Cu. Yds.

SPILLWAY: (use with embankment only)

EMBANKMENT:

Height _____ Feet

Top Width _____ Feet

Length _____ Feet

Fill _____ Cu. Yds.

GEOLOGY

Soil Types _____

SPECIFICATIONS:

WITHOUT EMBANKMENT

1. Side slopes of excavated pond to be not steeper than 2:1.
2. Excavated material will be deposited at least 12 feet from edge of pond and spread as deemed necessary by the engineer.

WITH EMBANKMENT

1. Remove surface soil and roots from both the pond and embankment area.
2. Have enough moisture in fill material so when squeezed in hand it will form a ball that barely holds together.
3. Embankment will not be placed closer than 12 feet from edge of pond (see details).
4. Lay fill in loose horizontal layers not to exceed 7 inches deep when using sheepsfoot roller and 5 inch maximum without sheepsfoot roller.
5. Provide outlet as required by engineer.
6. Fence pond as a safety measure.
7. Slopes of embankment will be 3:1 on pond side and 2:1 on downstream side (see details).

PLAN & LOCATION MAP

SEC. _____ T. _____ R. _____

TEST BORINGS

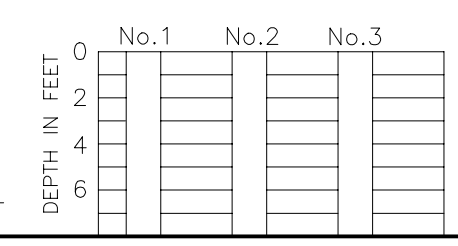

Practice Code _____ Job Class _____

	Name	Date
Designed		
Drawn	L. Kamna	10/93
Checked		
Approved		
Title		

EXCAVATED FARM POND

USDA NRCS Natural Resources Conservation Service

File Name DAS378030.dwg

Oregon Standard Number DAS–378030

Sheet No. 1 of 1