Updated and Pending Designs

Teresa D. Morales, P.E.
State Design Engineer, Oregon
USDA-NRCS

NRCS Natural Resources Conservation Service

Objectives

Part 1: Present Updated Standard Drawings for 4', 6', and 8' high Concrete Stacking Facilities

Part 2: Other Considerations in the Construction of Stacking Facilities

Part 3: New Standard Drawings for Small Composting Operations

Part 4: Dates for Pending Projects

NRCS

Part1: Updated 4', 6', and 8' high Concrete Stacking Facilities

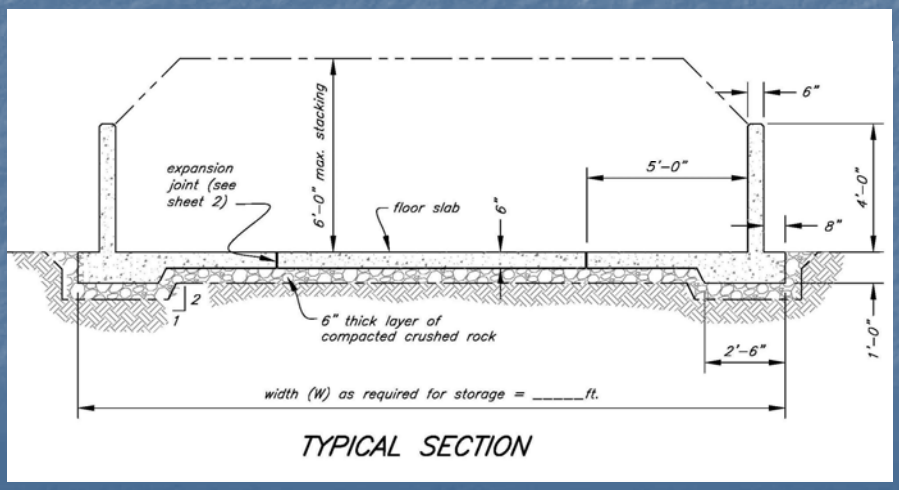

Reinforcing Steel

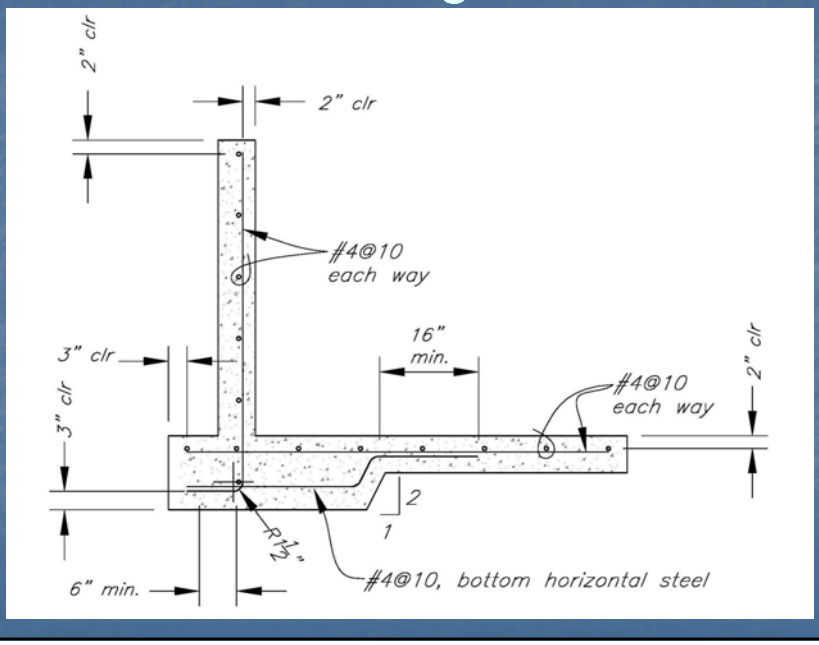

Slab

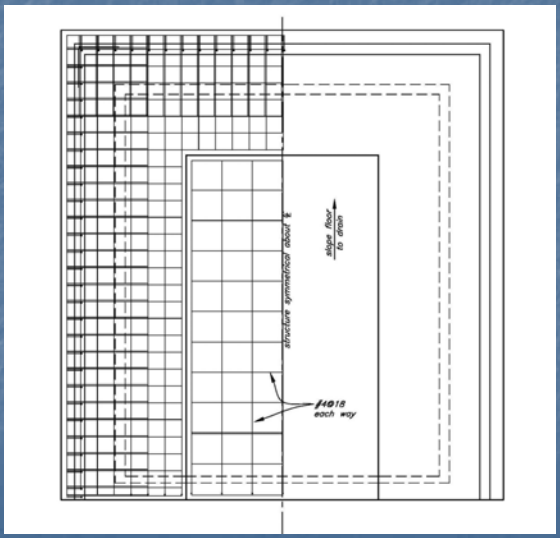

Part 2: Some Construction Issues that Influence the Long Term Performance of Concrete Structures

- Shrinkage
- Curling
- Unintended Restraints

Shrinkage

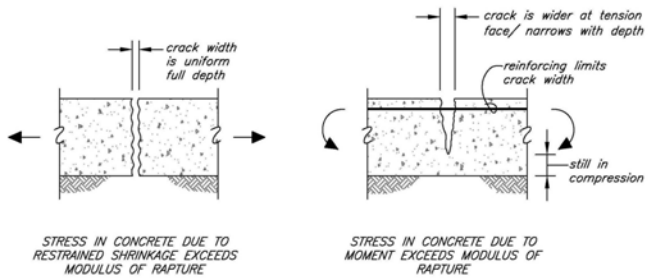

MACRO–CRACKING IN CONCRETE

Curling

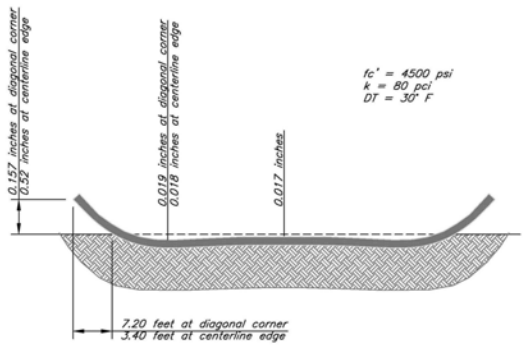

SLAB CURLED SHAPE FOR A 6 INCH THICK
SLAB WITH A JOINT SPACING OF 24 FEET

Cracking due to Unintended Restraint

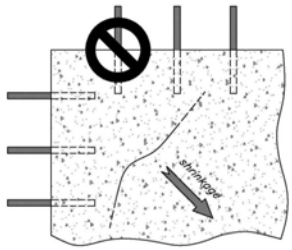

Dowels are good solution for load transfer across a joint but may restrain the slab edge longitudinally … we need to hold down load transfer in one direction while releasing or minimizing restraint in the other direction.

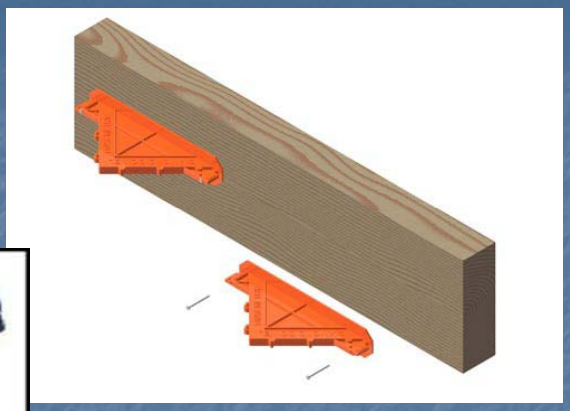

Diamond Dowel Plate
& Sleeve Set

Consequences of Curling/Shrinkage/Cracking

- Uncontrolled cracking of slabs/footings
- Slab Movement
- Impact to normal operation
- Crack and Joint Spalling
- Reduced Long-term Durability of Slab

What Affects Shrinkage/Curling/Other Types of Cracking (Unintended Restraint)

Designer-Controlled

- Joint Spacing
- Increase T & S steel

Construction-Controlled

- Adequate Subgrade preparation
- Controlling Slab moisture gradient
- Slab Temperature Gradient
- Controlling (or Minimizing) Restraints

Part 3: Composting Bins w/ Removable Side Flashboards

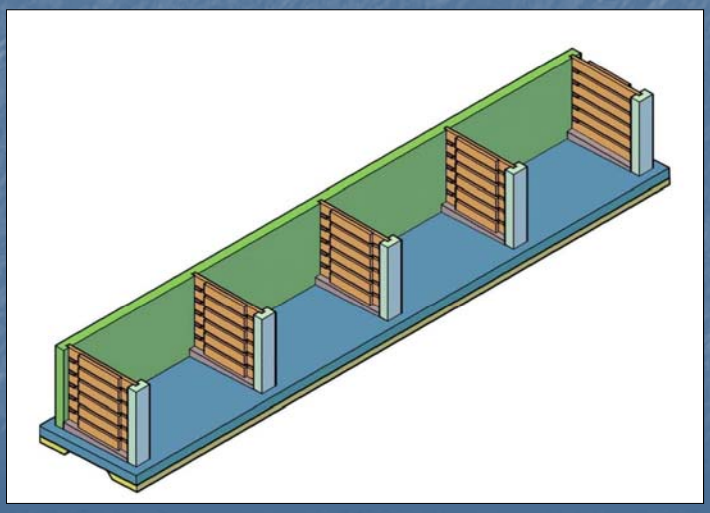

Composting Bins w/ Removable Front and Side Flashboards

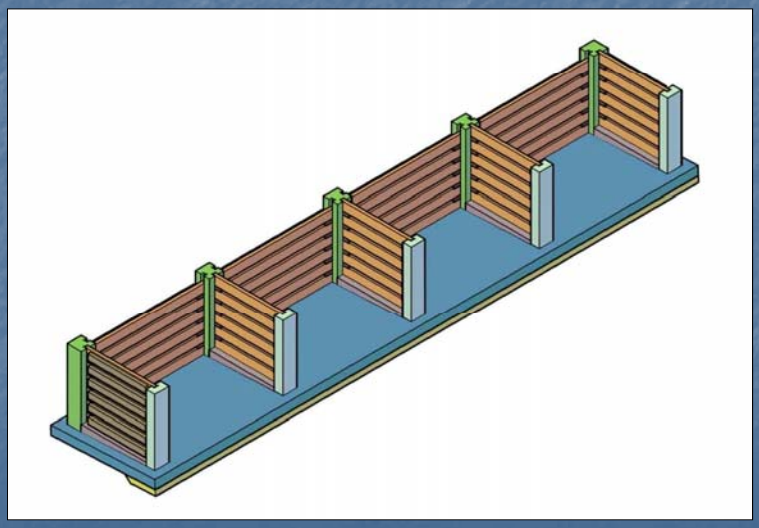

Part 4: Pending (Soon to be Released) Items

- Updated Standard Drawings for 4', 6', and 8' high stacking walls (April 2010)
- Updated Construction and Material Specifications (May 2010)
- Solar Power Technical Note (late May, early June 2010)

Questions?