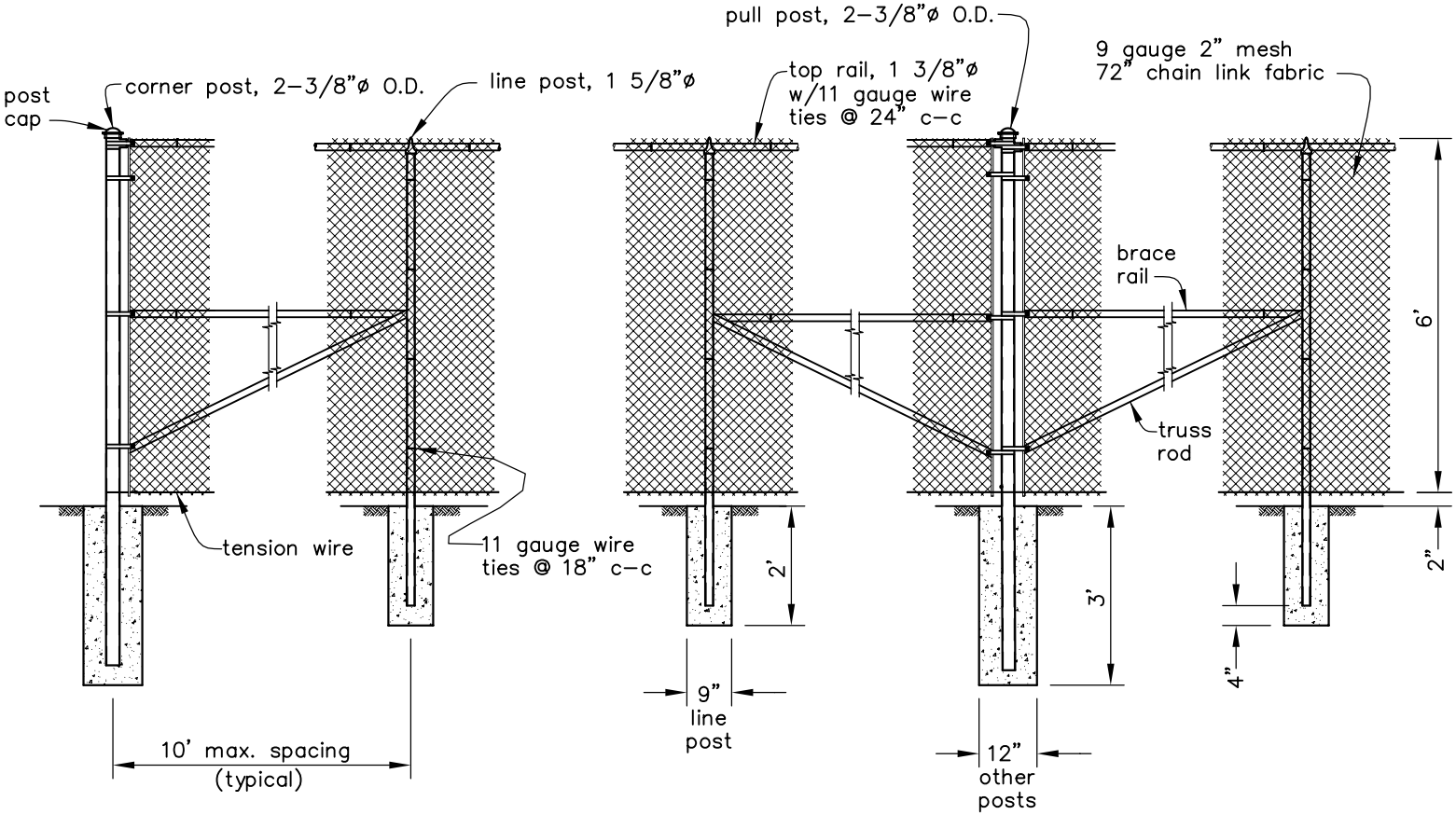

ELEVATION VIEW

Concrete shall be class 3000. Concrete for line posts to be 9" min. diameter. Concrete for all other posts to be 12" min. diameter.

This drawing requires supporting technical documentation prior to use and must be adapted to the specific site.

Drawing not to scale.

		Date
Designed		
Drawn		2/2005
Checked		
Approved		

CAD FILE NAME: OR_CHAINLINK6.DWG

DRAWING NO.

SHEET OF

NRCS U.S.D.A. NATURAL RESOURCES CONSERVATION SERVICE

LIVESTOCK FACILITIES

CHAIN LINK FENCE