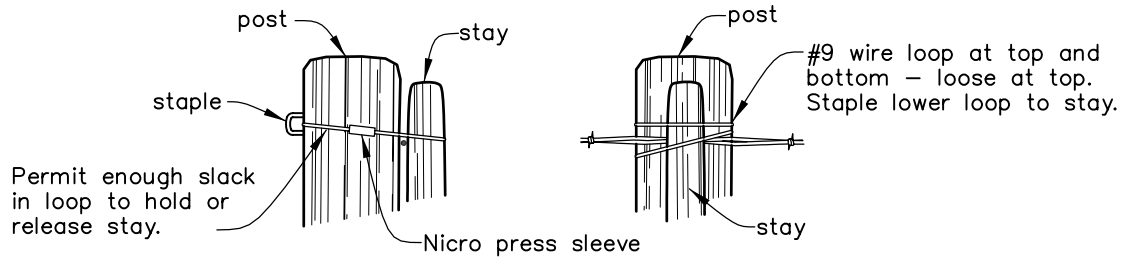

DETAIL OF FASTENER

NOTE: Wire should be between post and stay, so when laid down, the wires are on top of stay. Prevents wire pulling loose when picking up fence.

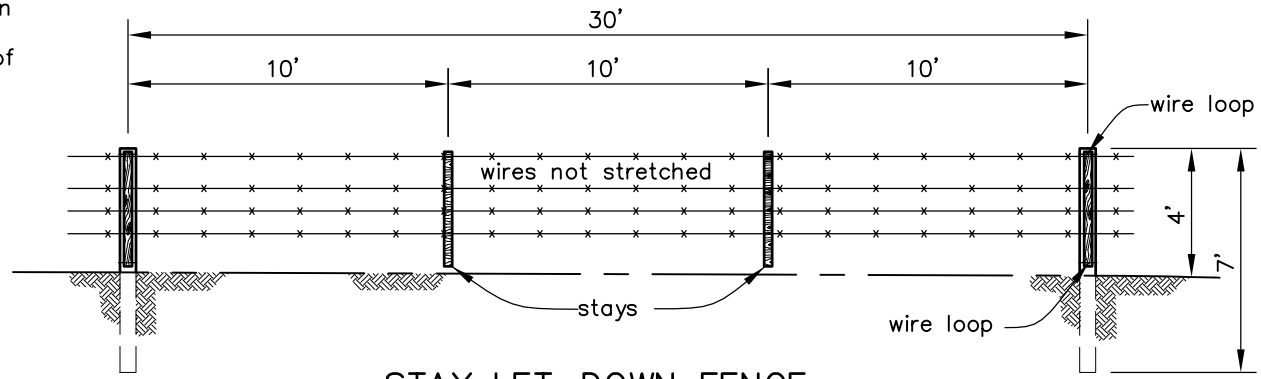

STAY LET–DOWN FENCE

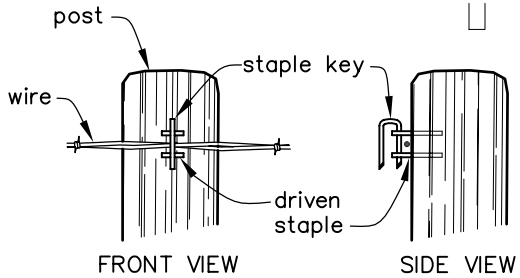

DETAIL OF STAPLES

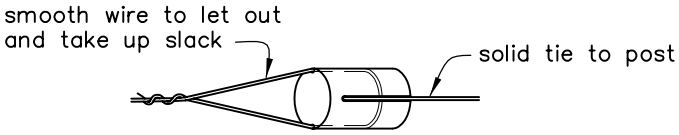

DETAIL OF STRAIN INSULATOR

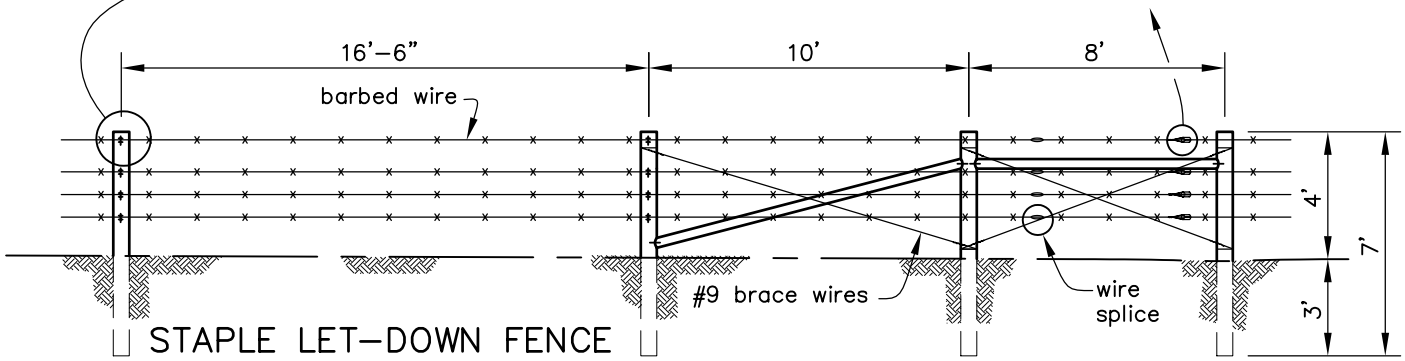

STAPLE LET–DOWN FENCE

This drawing requires supporting technical documentation prior to use and must be adapted to the specific site.

Drawing not to scale.

		Date
Designed		
Drawn		2/2005
Checked		
Approved		

CAD FILE NAME: OR_LETDOWN_FENCE.DWG

DRAWING NO.

SHEET OF

NRCS U.S.D.A. NATURAL RESOURCES CONSERVATION SERVICE

LIVESTOCK FACILITIES

LET–DOWN FENCE