Woodland Fish and Wildlife

February 1990

Wood Ducks on Small Woodlands

Some people say the wood duck *(Aix sponsa)* drake is the most spectacularly marked duck in the world. Others limit the claim to North America. Regardless, the male "woodie" is one of nature's masterpieces. In flight, these birds are unusual in appearance with their crested heads, square tails and broad wings. But, close up or in the hand, the drakes are difficult to adequately describe in words.

The head crest of the male wood duck has irridescent green in front blending to purplish at the rear. Red eyelids and irises are set in purple to green feathers that cover the face. The bill is small but colorful with white edges, a red base and sides and a black tip and ridge. Along the bird's flanks, bronze feathers have fine black striping and some are black tipped. The dark back and rump are bordered by white stripes. White also accents the crest and collars the throat area.

In contrast, the female is more drab but has a distinctive crest and white rings around her eyes. Overall, she is brownish with a touch of irridescent green and the under part of the tail and belly are white.

Washington Department of Wildlife.

Both sexes are about 20 inches long and weigh about one and a half pounds making them smaller than a mallard, but larger than a teal. They are about the size of a wigeon.

Also unique about the wood duck is its call. The female makes a squealing " w e e e ek w e e e e k" sound unlike the quack of other ducks. The male makes a similar sound but very softly and seldom.

As most ducks do, the woodies molt twice a year. During the molt beginning in July and lasting until mid September or October, the drakes look much like the hens. Also for a time during this period both sexes are flightless while their flight feathers are molted and replaced.

Distribution

In the early 1900's overhunting and habitat destruction had decreased wood duck populations to the point where there was fear for the continued existence of the species. However, restrictive laws brought the birds back until in the 1940's hunters were again allowed to take them during the season. Since then the popular and effective program to provide artificial nest boxes has increased their numbers and distribution. Massive marsh drainage is still a serious problem in some areas. Protection of riparian and wetland areas is important in retaining wood duck habitat.

Wood duck numbers are comprised of a large eastern population and a relatively small western population. The greatest number of woodies are found in the southeastern United States with their range extending north into Canada and west to Texas and the eastern edge of the Great Plains. The greatest numbers in the West are found in British Columbia, western Washington, the Willamette Valley of Oregon and especially the Central Valley of California. However, the birds

are found in fewer numbers in most areas in Oregon and Washington where there is suitable habitat. They are fairly common in northeastern Washington. Wood ducks both nest and winter in the western part of the two states, but most of the Pacific population migrates to California for the cold months.

Life History

As the name suggests, these birds are residents of wooded areas near water. Unlike most of their relatives woodies roost in trees and nest in cavities in trees. They are not seen in large flocks as are other ducks, but are more often seen in pairs or groups up to about six. During the breeding season the males do not establish large territories as is the case with most other ducks, but they do defend the area immediately around the female.

Nesting usually starts in late March and an average clutch is about 12 eggs. A fairly common occurence is the "dump nest". These nests are used by a number of birds and may contain up to 40 eggs. Eventually one female may sit on the nest with varying hatching success. Incubation period is about 30 days.

When they are about one day old, the young ducks climb up the inside of the nest, perch momentarily on the edge of the entry hole, and then launch themselves into the air. With tiny, fuzzy wings flapping to no avail, they may fall as far as 50 feet to the ground, but are so light they are seldom injured. The calling mother assembles the group and leads them in a pack to the nearest water. If they are hatched too far from the water many will not make it and on an average only about half of the hatchlings will survive to adulthood.

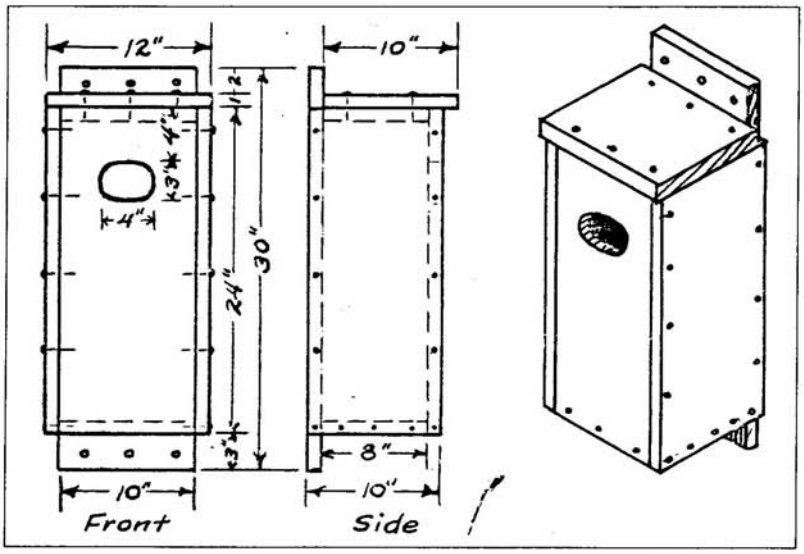

Oregon Department of Fish and Wildlife.

As is true with many young birds, the young wood ducks are dependent on a supply of insects for the early part of their life. Until the youngsters are about six weeks of age, animal foods such as mayfly and dragonfly nymphs and other aquatic insects make up about 85 percent of their diet. As the birds mature they turn to a variety of plant materials found in and around ponds and a few kinds of terrestrial vegetation.

Adults will eat the larger seeds and fruits of such things as wild grape and also pick up spilled and scattered corn and other grains near the water areas where they are living. When available, acorns are popular with the woodies. Because of this preference for nuts and acorns they will occasionally come in conflict with the human activity of growing filberts or hazelnuts. If a large group or persistent small group descends on such an orchard they may be considered a problem by some landowners. Normally wood ducks are not numerous enough to cause this difficulty on a wide scale.

Habitat

Almost any small body of water has the potential to provide a home for a pair of wood ducks. Natural nest sites are hollowed-out cavities 20 to 50 feet above the ground in trees near the water. Removal of snags and drainage of swampy areas has been responsible for the disappearance of wood ducks in many areas.

Fortunately the woodies have proven to be very adaptable and readily use artificial nesting sites. A small pond or creek with a good riparian area can provide the roosting, nesting, hiding and feeding areas needed for a pair of woodies to set up housekeep-

ing. Ponds, oxbow ponds or other "still" water is essential for brood rearing. If a nesting tree is not present, an artificial nest can be installed to provide their home.

There are a number of things to consider when putting in artificial nest boxes. Plans for the construction and placement of the boxes are available from your state wildlife agency or other sources listed in the references. Briefly, the natural nesting cavity or nest box should be at least 12 inches deep and 10 inches wide. The entry hole should be 3 to 4 inches in diameter. In artificial boxes, an oval hole 3 inches high and 4 inches wide tends to discourage entry by raccoons. The box should always be vertical or lean slightly to the front so the little ones can climb out and rough lumber should be used for the front or screen attached on the inside to be used as a ladder. Also the bottom of the box should have a few inches of sawdust or shavings in it for nesting purposes. The most successful boxes usually are located 2 to 3 feet above high water levels.

It is not difficult to build and install boxes, but certain guidelines must be followed to make the boxes successful. Improperly built and installed boxes can be detrimental to the ducks rather than beneficial.

Nest boxes must be checked and cleaned each year to be most productive. The hens will often return to the same box year after year if it is maintained. Servicing the boxes can be interesting because they may become home for a variety of other wildlife including owls, squirrels, starlings and even wasps and bees! In some parts of the Pacific NW hooded mergansers and goldeneye ducks may also use the boxes.

Predators

One of the dangers of installing artificial nesting boxes improperly is that it makes the birds vulnerable to predators. Raccoons and squirrels are two of the most common nest predators. The youngsters are vulnerable to all of the creatures such as house cats, mink, crows, magpies and opposum that take young birds. Nest boxes can be made predator proof by attaching metal shields around the supporting tree or post.

Riparian areas with bushes and trees that overhang the water provide both food and hiding cover for the ducks. Corn planted near the riparian area, left unharvested and then knocked down can provide some food for the adults and help attract them. However, natural marsh areas and healthy, natural riparian areas provide the best wood duck habitat. Regulations and the artificial nest box program have been important in bringing back the woodies, but good habitat is still the key to ensuring the continued presence of these most colorful North American waterfowl.

REFERENCES

Ducks Unlimited
One Waterfowl Way
Long Grove, IL. 60047
(Wood duck box plans and other information on waterfowl)

Bellrose, Frank C. 1980 Ducks, Geese and Swans of North America. Stackpole Books, Harrisburg, PA.

Linduska, J.P. (editor) 1964 Waterfowl for Tomorrow 770 pp. US Government Printing Office Washington, D.C. 20402

Nest Boxes for Wood Ducks. May 1976 Wildlife Leaflet 510 US Government Printing Office Washington D.C. 20402

Wood Duck Nest Box Plans. Oregon Department of Fish and Wildlife P.O. Box 59 Portland, OR. 97207

Wood Duck Nest Box Plans. Washington Department of Wildlife, 600 N. Capitol Way, Olympia, WA. 98501.

Check list

1. Pond or stream within 1/2 mile _____
2. Snags with 12" deep cavities or artificial nest boxes _____
3. Riparian areas with roosting and cover vegetation _____
4. Acorns, hazelnuts or other seeds and fruits for summer food _____

Our Purpose...

This leaflet was written by Ron Shay, WFWG Coordinator, with technical review by Jim Bartonek, Pacific Flyway Representative, U.S. Fish and Wildlife Service.

The Woodland Fish and Wildlife Project is a cooperative effort among the World Forestry Center, Oregon State Department of Forestry, Washington State Department of Natural Resources, Oregon State University Extension Service, Washington State University Cooperative Extension, University of Washington Center of Streamside Studies, Oregon Association of Conservation Districts, Oregon Small Woodlands Association, Washington Farm Forestry Association, Oregon Department of Fish and Wildlife, Washington Department of Fisheries, Washington Department of Wildlife, Oregon Soil Conservation Service, Washington Soil Conservation Service and the USDA Forest Service. The World Forestry Center serves as the coordinating organization for the project.

The Woodland Fish and Wildlife Project was initiated to provide information on fish and wildlife management to private woodland owners and managers. It is the intent of the organizations involved in this project to produce publications that will serve as practical guides to woodland owners.

Each publication is intended to be complete in itself. Users may find it convenient to collect all publications in this series in a three ring binder to form a permanent reference file. Woodland Fish and Wildlife Project publications range from an overview of fish and wildlife opportunities on woodland properties to specific publications concerning techniques for managing individual species.

These publications can be obtained from any of the cooperating organizations or by contacting the World Forestry Center, 4033 SW Canyon Road, Portland, OR 97221, (503) 228-1367.

2/90-15M

World Forestry Center
4033 SW Canyon Road
Portland, Oregon 97221

Nonprofit Org.
U.S. Postage
PAID
Portland, Oregon
Permit No. 1386