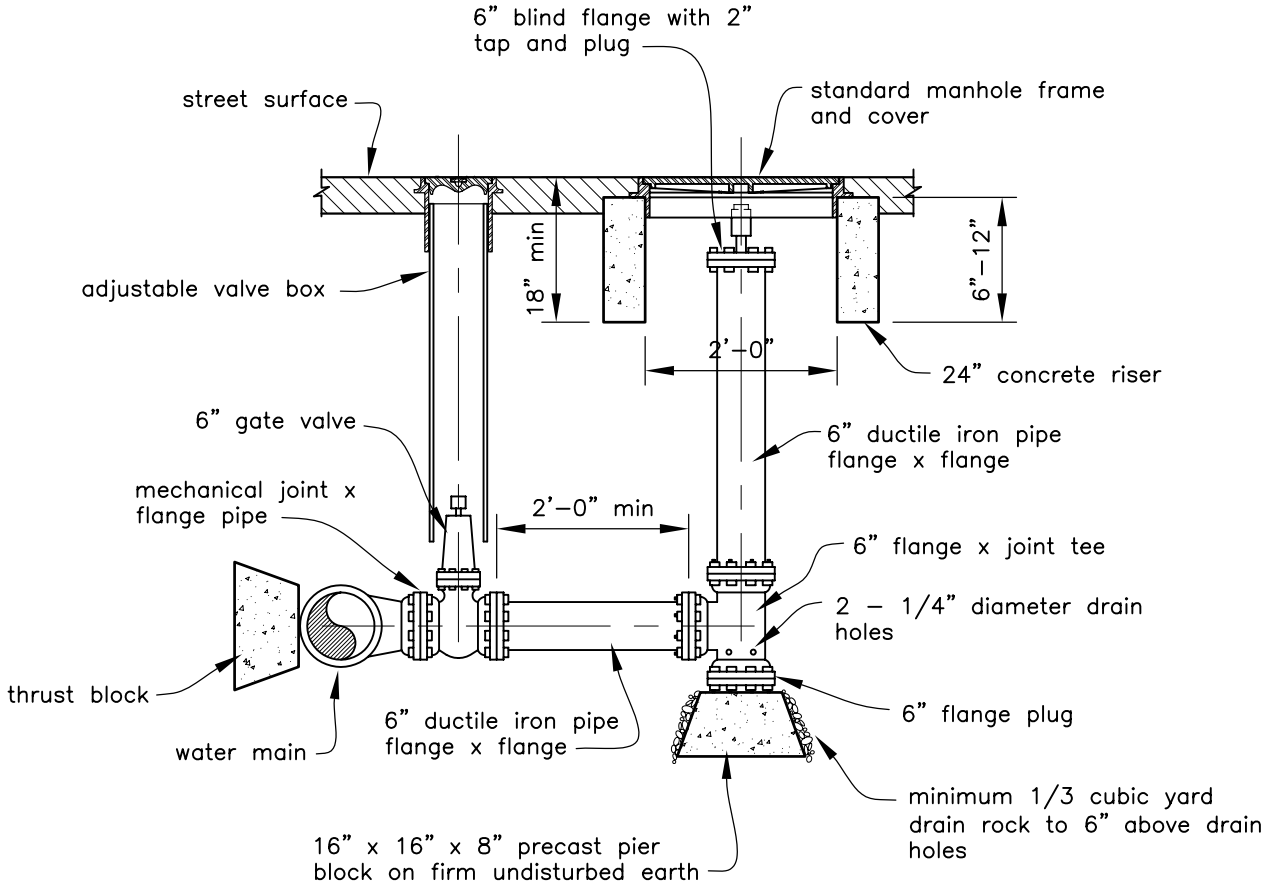

NOTES:

For blow–off operations, remove pipe cap and add a 2" pipe extention and 2" check valve assembly.

Back–flow prevention devces required for all blow–off assemblies.

This drawing requires supporting technical documentation prior to use and must be adapted to the specific site.

Drawing not to scale

	Date	CAD FILE NAME	6" BLOW–OFF VALVE
Designed		OR_6IN_BLOWOFF.DWG	
Drawn	2/2005	DRAWING NO.	
Checked		SHEET OF	EROSION CONTROL
Approved		NRCS U.S.D.A. NATURAL RESOURCES CONSERVATION SERVICE	