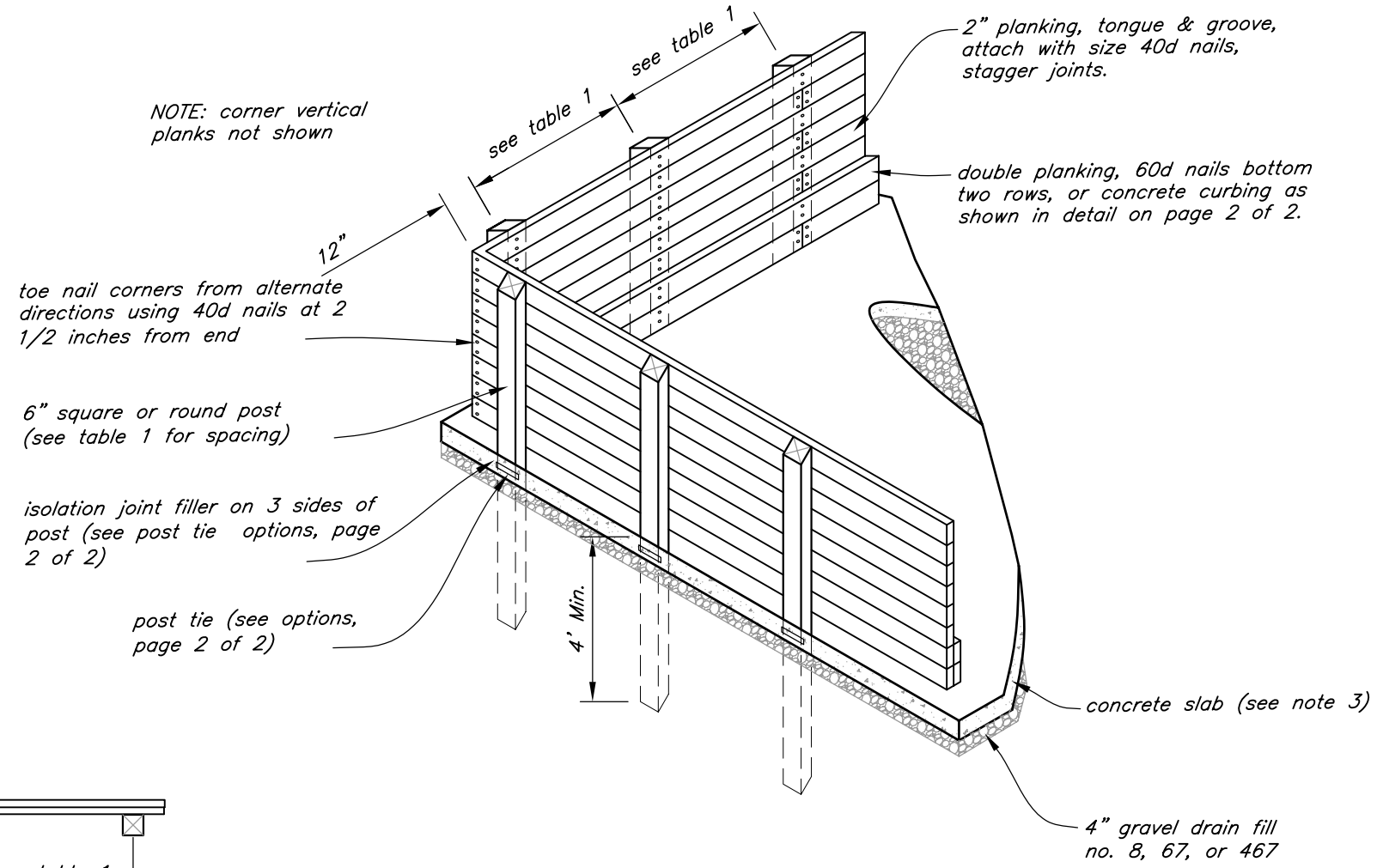

CORNER DETAILS

Not to Scale

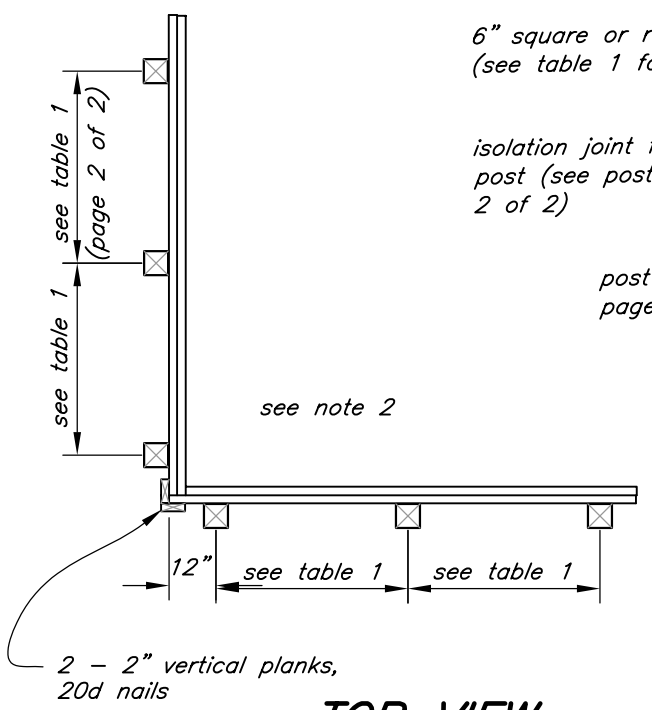

TOP VIEW

Not to Scale

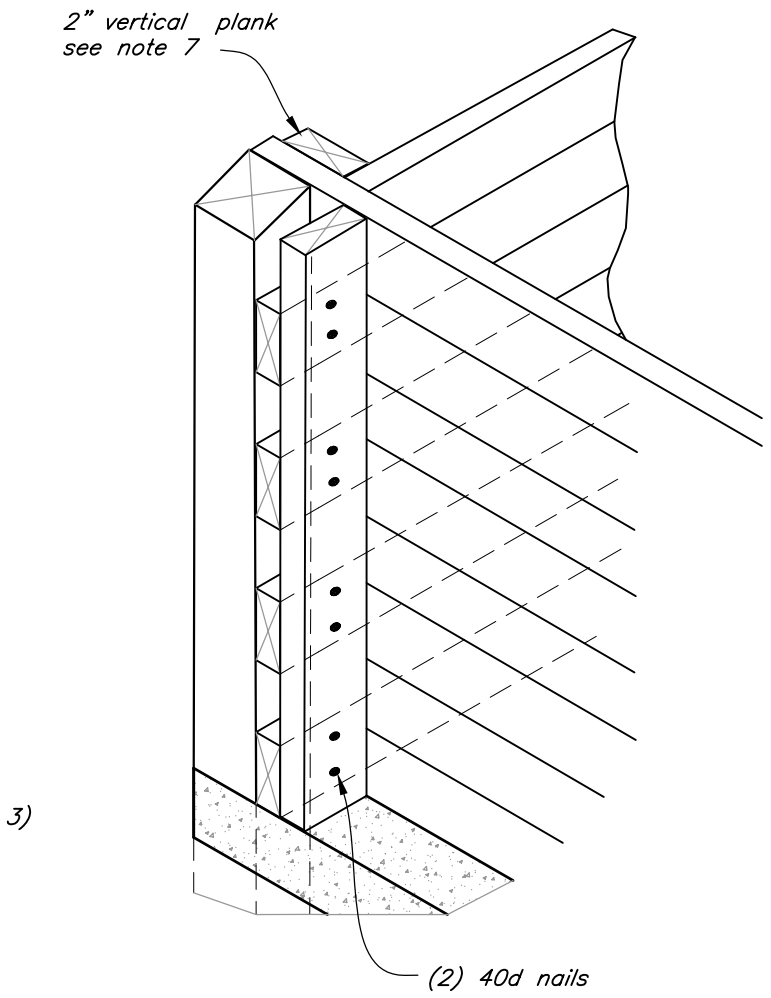

OPTIONAL CORNER

Not to Scale

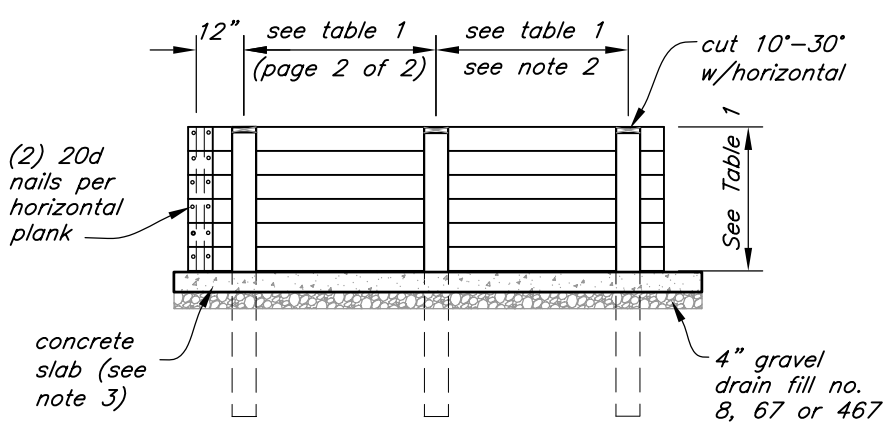

END VIEW

Not to Scale

CONSTRUCTION NOTES:

1. All posts shall be 0.6 pounds per cubic foot Chromated Copper Arsenate (0.6 PCF CCA), Southern Yellow Pine (S.Y.P.). All other lumber No. 2 or better S.Y.P., 0.4 PCF CCA.
2. Table 1, Page 2 of 2 is for solid tongue and groove plank walls, manure loading at 60 PCF and compost at 35 PCF. Any changes must be approved by the State Conservation Engineer.
3. Maximum inside height of wall shall be 5 feet. Backfill optional, maximum height – 2/3h.
4. Post Ties are not required when backfilling to 2/3 the wall height, h.
5. All plank joints shall be staggered, 2" nominal thickness planks.
6. For "Optional Corner", saw tongue off horizontal planks to merge at post.

This drawing requires supporting technical documentation prior to use and must be adapted to the specific site.

Drawing not scale.

Date 5/2006
Designed
Drawn KLY
Checked
Approved
Title

PLANK WALL

LIVESTOCK FACILITIES

NRCS
Natural Resources Conservation Service
United States Department of Agriculture

File Name or_plank_wall.dwg
Drawing No.

Sheet 1 of 2

C:\home\CAD Drawings\Standard Drawings – pending\Miscellaneous\or_plank_wall.dwg, 5/22/2006 7:18:24 AM

TABLE 1 – MAXIMUM WALL HEIGHT		
POST SPACING (FT.)	MAXIMUM WALL HEIGHT (FT.)	
6" X 6" NO. 1 and 6" X 8" NO. 2	MANURE*	COMPOST*
2.5	5.0	5.0
3.0	4.5	5.0
4.0	4.0	5.0
4.5	3.5	5.0
5.0	3.0	5.0
6.0	2.0	4.0
6" X 6" NO. 2	MANURE	COMPOST
2.5	4.2	5.0
3.5	4.0	4.5
4.0	3.6	4.3
4.5	3.5	4.2
5.0	3.0	4.0
6.0	2.0	3.5

*Manure Loading = 60 Lbs./Cu.Ft.
*Compost Loading = 35 Lbs./Cu.Ft.

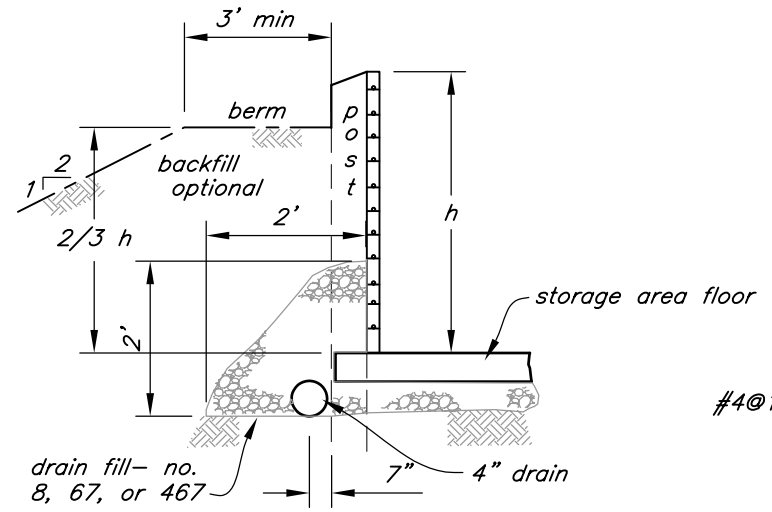

DRAIN DETAIL
AS REQUIRED

TABLE 1 – CONCRETE SLAB		
TYPE	THICKNESS	REINFORCEMENT
S–1	5"	none required
S–2	6"	#4@18"
S–3	varies	varies, see note 7.

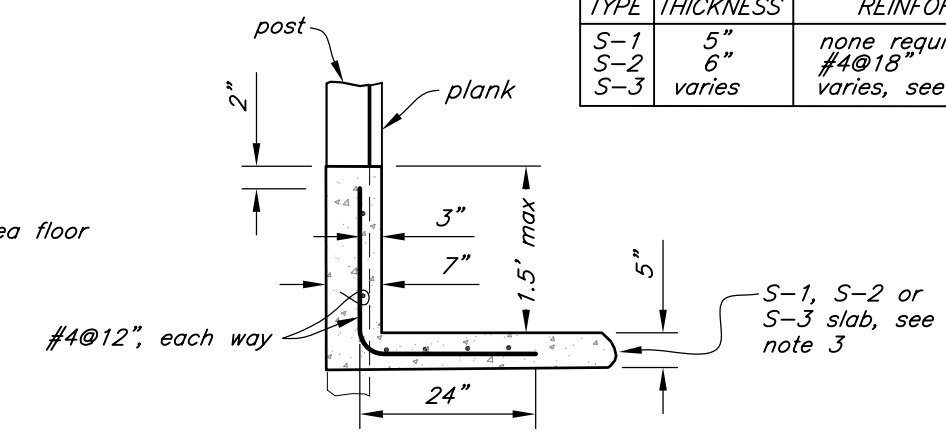

CONCRETE CURBING
AS REQUIRED

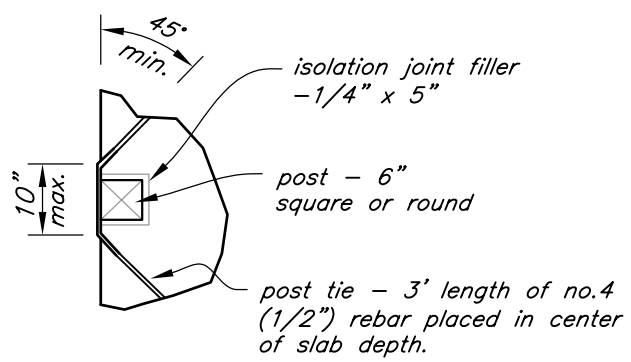

REBAR TIE OPTION

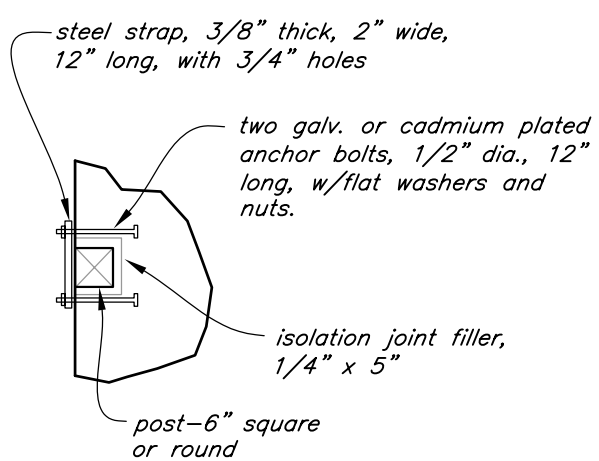

ANCHOR TIE OPTION

POST TIE OPTIONS

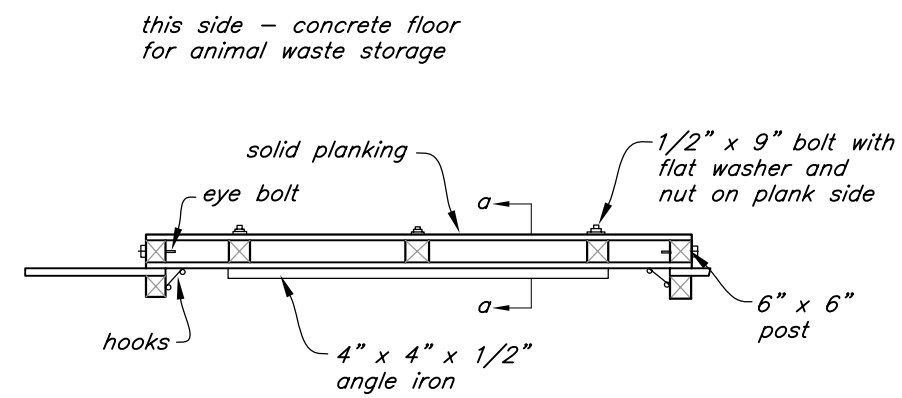

TOP VIEW

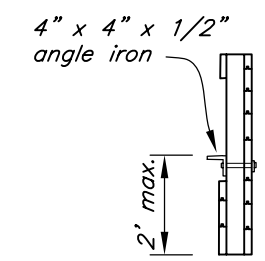

SECTION A–A

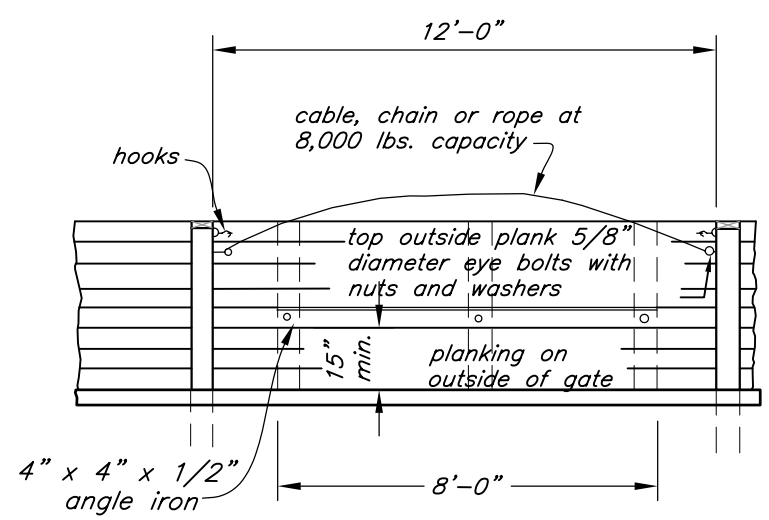

SIDE VIEW

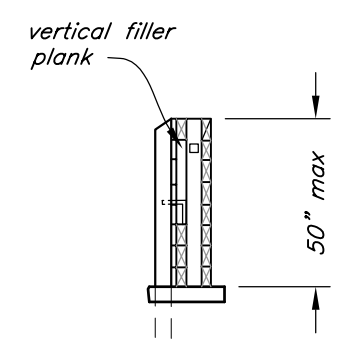

END VIEW

REMOVABLE GATE
AS REQUIRED

Drawing not scale.

Date 5/2006
Designed
Drawn KLY
Checked
Approved
Title

PLANK WALL

LIVESTOCK FACILITIES

NRCS
Natural Resources Conservation Service
United States Department of Agriculture

File Name
or_plank_wall.dwg
Drawing No.

Sheet 1 of 2

C:\home\CAD Drawings\Standard Drawings – pending\Miscellaneous\or_plank_wall.dwg, 5/22/2006 7:18:00 AM