Clear Form Print Form

Waste Facility Impoundment Closure Construction Notes:

1. Before the embankment is breached, remove as much waste as possible by agitation and pumping. Impoundment may need to be refilled, agitated, and pumped several times. Sludge which cannot be pumped shall be removed with earthmoving equipment.

2. Waste material will be land applied according to the specially prepared nutrient management plan which will have a section on the liquid and sludge portion of the waste.

3. For waste impoundments closed by filling with soil, the soil shall be placed in maximum 9-inch thick layers with each being compacted using two passes of the earthmoving equipment and shall comply with Construction Specification Earthfill, AR-23C Earth Fill - Class C.

4. The top 1 foot of backfill shall be constructed of the the most impervious material available and shall be mounded to shed water.

5. The backfill height shall exceed the height to the final design grade by a minimum of 5% to allow for settlement.

6. If the facility is not backfilled with soil, the breach shall have a minimum side slope of 3:1 and a bottom width of 10 feet.

7. Disturbed areas shall be vegetated in accordance with Conservation Practice Standard 342 Critical Area Planting.

8. All structures used to convey waste to waste facility or to provide to provide drainage from the impoundment area shall be removed and replaced with compacted earth fill and rendered unable to convey waste. Structures will be disposed according to local laws.

Fresh Water Conversion Notes:

1. In addition to the sludge, a minimum of six inches of soil shall be removed from the entire inside of the pond.

2. The interior side slopes of the embankment portion of the impoundment shall have a minimum slope of 3:1.

3. The configuration and design of the fresh water pond shall meet meet Conservation Practice Standard 378 Farm Pond. See attached drawings for specific dimensions.

Additional Notes:

_____

_____

Name on Permit (if applicable)_____ Permit Type_____Permit Number_____

Type of Facility (Circle One) Lagoon Waste Storage Pond Other_____
Type of Animals (Circle One) Swine Dairy Other _____

Designed Storage_____ Amount Liquid_____ Amount Slurry_____

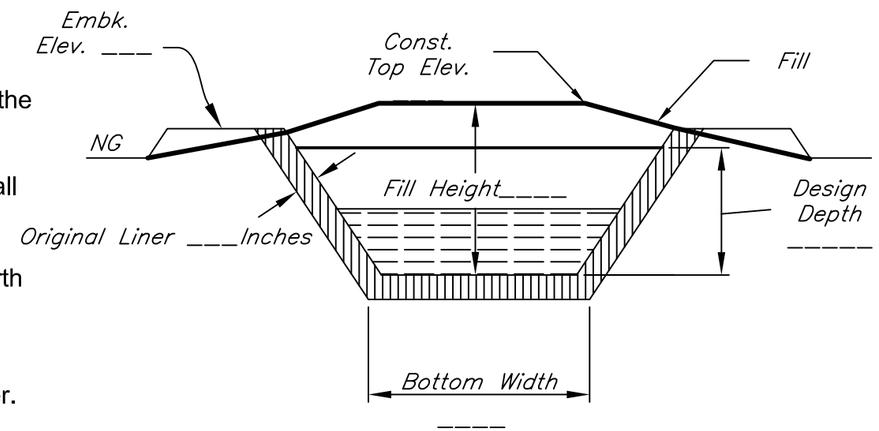

CROSS SECTION

NOT TO SCALE

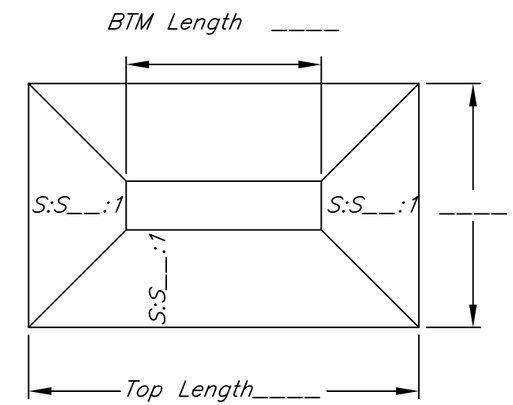

PLAN VIEW

Location is shown on attached aerial photo.

This practice was closed and filled or converted (circle one) to fresh water and meets NRCS Standards & Specifications.

NRCS Representative _____ DATE:_____

Table of Quantities

	Designed	As Built
Evacuation (1000 gals)	_____	_____
Earthfill (CY)	_____	_____
Seeding (AC)	_____	_____

The Following Specifications are incorporated by reference and may be located @ http://www.ar.nrcs.usda.gov/technical/engineering_construction_specs.html

1. AR-23C Earthfill- Class C.
2. AR-21 Excavation.

811 Know what's below. Call before you dig.

Date
Designed W.A. 12/11
Drawn R.M. 12/11
Checked - 12/11
Approved W.D. 12/11

PRODUCER_____
WASTE FACILITY CLOSURE (360-1)
JOB SHEET
---SEC.---Rng.---Twn.---County, AR

USDA NRCS
United States Department of Agriculture
Natural Resources Conservation Service

File No. AR-ENG-425
Job Sheet
Drawing No. AR-ENG-425
12/28/11 11:30 AM
Sheet of