Clear Form

Print Form

BRIDGE SCOUR PROTECTION

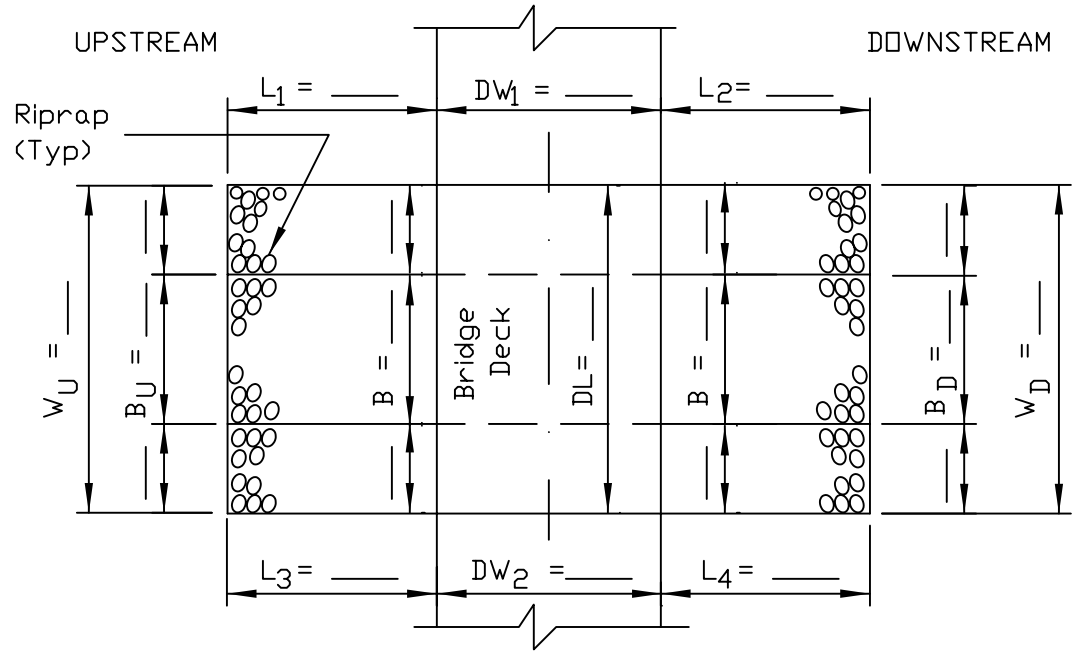

PLAN

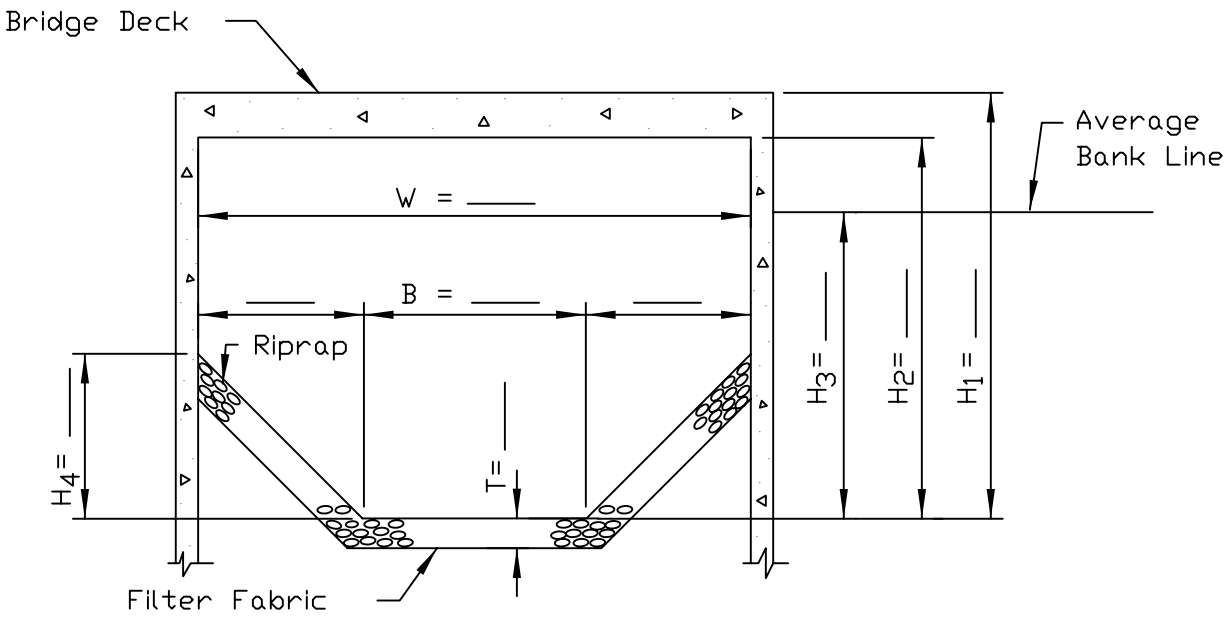

SECTION ON CENTERLINE

NOTES:

1. The filter fabric shall meet the requirements for the following specification 592 GEOTEXTILE Table 1 or 2, Class I .
2. The rock riprap shall be reasonable well graded with a maximum rock size (D_{100}) of _____ " and an average rock size (D_{50}) of _____ ".
3. The riprap shall be placed according to construction specification 61 LOOSE ROCK RIPRAP. The rock may be equipment placed.

Rev.3-19-96

CAD FILE = AR-724.2D

REFERENCE			
Project			
Designed		Date	
Checked		Date	
Approved		Date	

U.S. DEPARTMENT OF AGRICULTURE
NATURAL RESOURCES CONSERVATION SERVICE
ENGINEERING DESIGN SECTION LITTLE ROCK, ARKANSAS
(ADOPTED FROM ILLINOIS IL-700)

STANDARD DWG. NO.
AR-ENG-724
SHEET 1 OF 1
DATE 9-15-93