Clear Form

Print Form

PIPE DROP INLET DESIGN SHEET

FRONT

Project _____ Location _____

By _____ Date _____ Checked By _____ Date _____

D	f	A
12	.1157	0.785
15	.0859	1.23
18	.0674	1.77
24	.0459	3.14
30	.0341	4.91
36	.0267	7.07
42	.0218	9.62
48	.0182	12.57
54	.0156	15.90
60	.0135	19.63
66	.0119	23.76
72	.0106	28.27
78	.00954	33.18
84	.00864	38.48
90	.00788	44.18
96	.00723	50.27
102	.00667	56.75
108	.0618	63.62
114	.00575	70.88
120	.00537	78.54
132	.00473	95.03
144	.00421	113.1

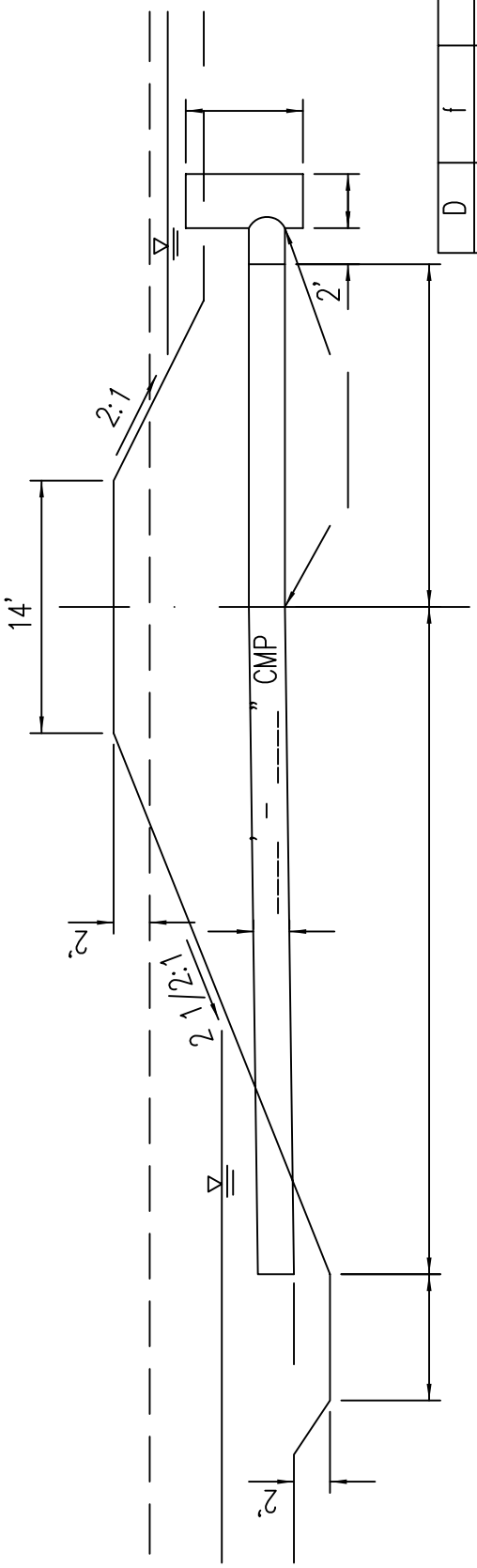

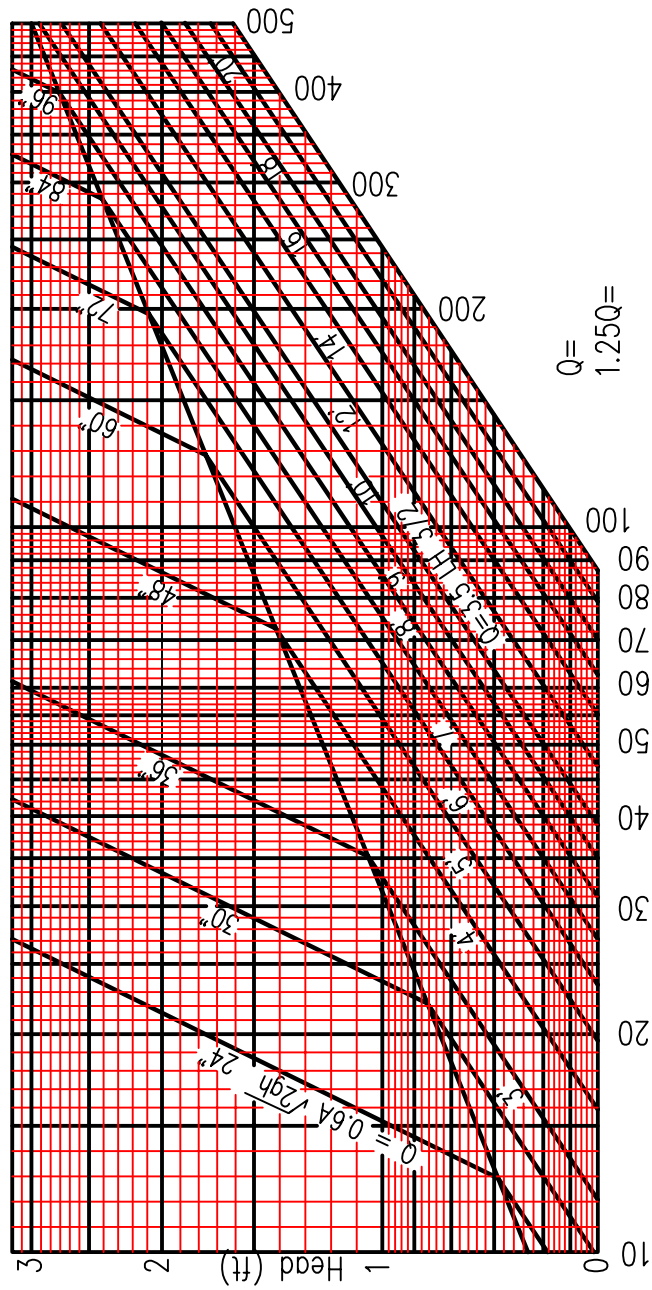

K = 2+L(f) =

$h_r = KQ^2/2gA^2$ =

Min. head over _____ " inlet =

V = Q/A =

CAD FILE = AR-200.2D

REFERENCE

Project

Designed _____ Date _____

Checked _____ Date _____

Approved _____ Date _____

U.S. DEPARTMENT OF AGRICULTURE
NATURAL RESOURCES CONSERVATION SERVICE
ENGINEERING DESIGN SECTION LITTLE ROCK, ARKANSAS

STANDARD DWG NO. **AR-ENG-200**

SHEET 1 OF 2

DATE 4/14/92

Clear Form

Print Form

BACK

PIPE DROP INLET DESIGN SHEET

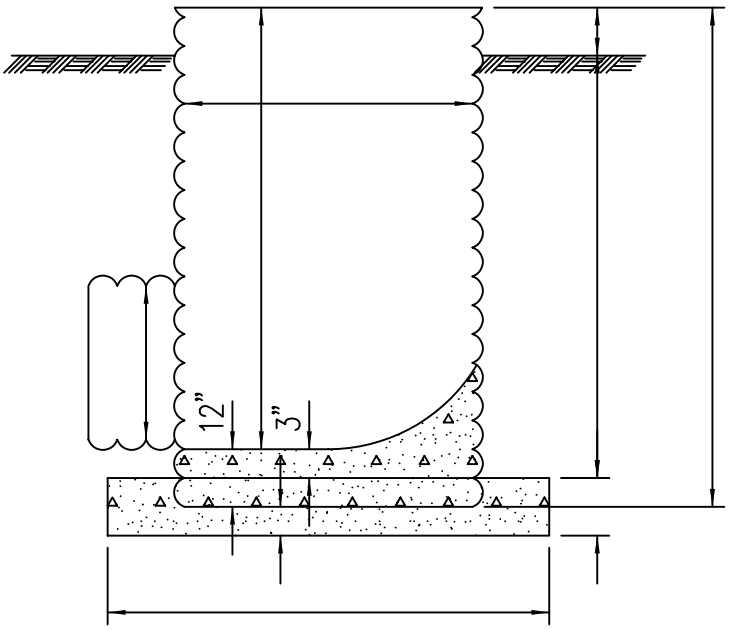

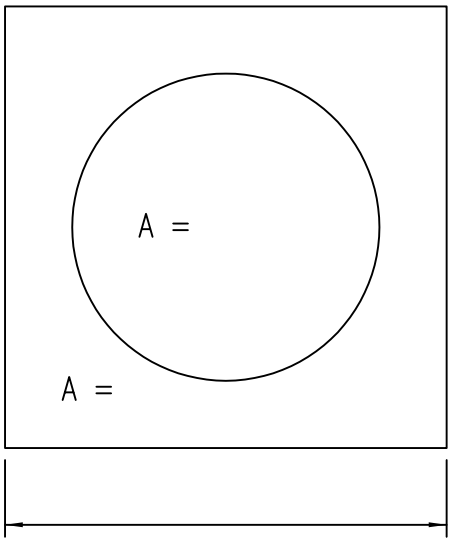

D	Wt(ft/ft)	gage
24	33	12
30	41	12
36	49	12
42	57	12
48	65	12
54	73	12
60	81	12
66	113	10
72	123	10
78	133	10
84	173	8
90	186	8
96	198	8
108	256	8
120	284	8
144	341	8
168	398	8
192	454	8
216	511	8
240	568	8

WEIGHT

Riser: _____ft. @ _____#/ft. _____

Concrete: (_____ft^2)(0.25ft.)(87.6#/ft^3) _____

(_____ft^2)(____ft)(87.6#/ft^3) _____

Soil: (_____ft^2)(____ft)(40#ft^3) _____

TOTAL = _____

UPLIFT

Riser: (_____ft^2)(ft.)(62.4#/ft^3) _____

$$F.S. = \frac{\text{weight}}{\text{uplift}} = \quad = _____$$

REFERENCE

Project _____

Designed _____ Date _____

Checked _____ Date _____

Approved _____ Date _____

U.S. DEPARTMENT OF AGRICULTURE
NATURAL RESOURCES CONSERVATION SERVICE
ENGINEERING DESIGN SECTION LITTLE ROCK, ARKANSAS

STANDARD DWG NO. AR-ENG-200

SHEET 2 OF 2

DATE 4/14/92