Clear Form | Print Form

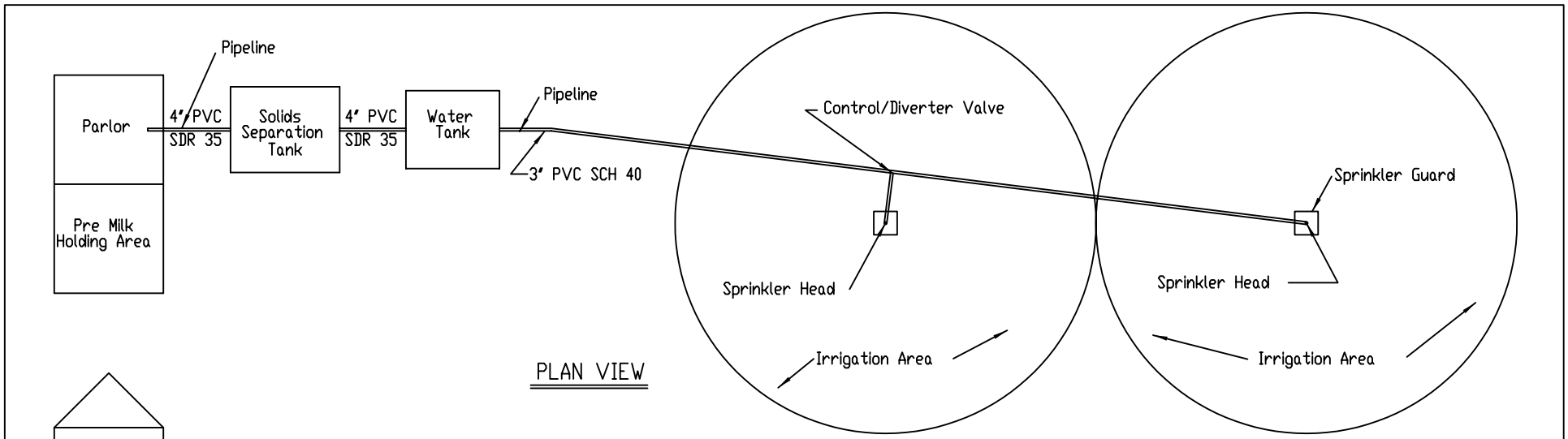

PLAN VIEW

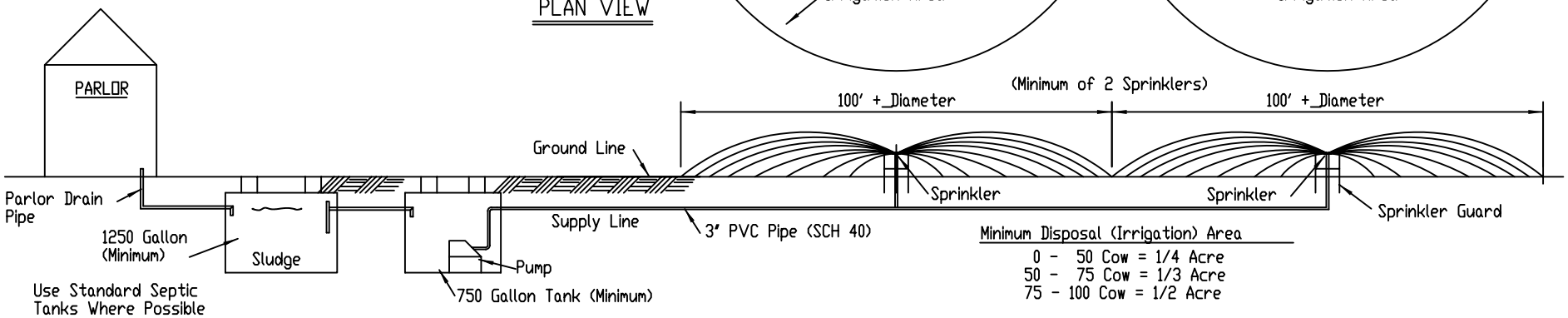

Minimum Disposal (Irrigation) Area

0 - 50 Cow = 1/4 Acre
50 - 75 Cow = 1/3 Acre
75 - 100 Cow = 1/2 Acre

PROFILE

SPRINKLER SYSTEM FOR TREATING MILK CENTER WASTE WATER

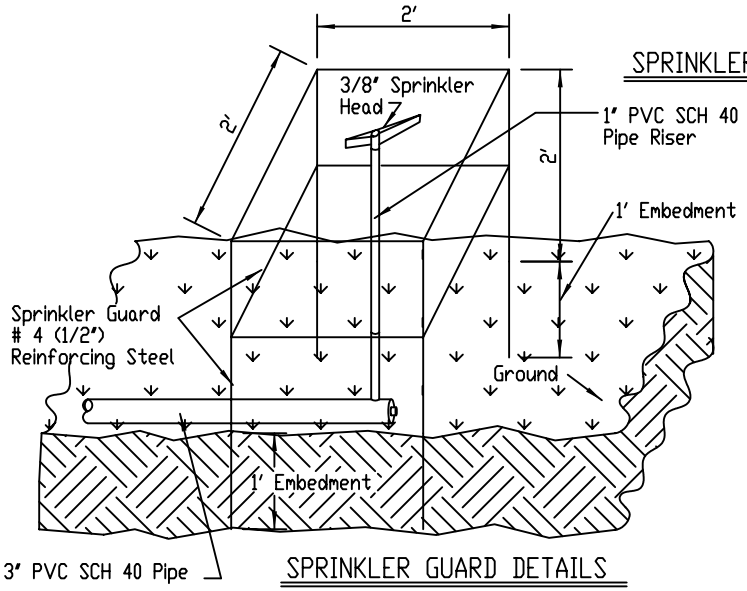

SPRINKLER GUARD DETAILS

BILL OF MATERIALS

ITEM	QUANTITY
Separation Tank	_____ Gallon
Water Tank	_____ Gallon
4" PVC SDR 35	_____ Lin. Ft.
3" PVC SCH 40	_____ Lin. Ft.
1" PVC SCH 40	_____ Lin. Ft.
Pump	_____ HP
# 4 Bar for Guard	_____ Lin. Ft.
Sprinkler Head	_____ Each

SPRINKLER SYSTEM FOR TREATING MILK CENTER WASTE WATER

_____ FARM

_____ COUNTY, ARKANSAS

U.S. DEPARTMENT OF AGRICULTURE
NATURAL RESOURCES CONSERVATION SERVICE

		Date	
Designed			Approved by
Drawn	R.L.M.	6/95	Title
Traced			Title
Checked			Sheet No 1 of 2 — Drawing No. AR-ENG-157, Sheet 1

CAD FILE = AR-157S1.2D

Clear Form | Print Form

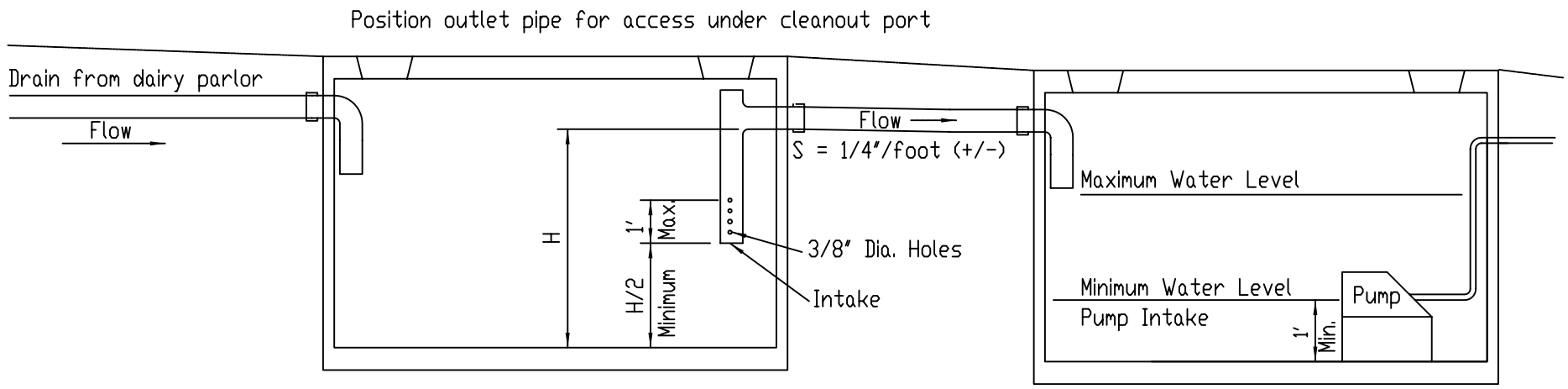

SOLIDS SEPARATION TANK

(Minimum 1250 gallons)

PUMP SYSTEM

WATER TANK

Tank capacity to handle 3 to 5 days of waste water (Minimum 750 Gallon)

Tank Maintenance: Periodic removal of solids from the solids separation tank and water tank will be required to insure satisfactory operation of the system. As a minimum, solids (sludge) should be removed from the solids separation tank when solids level reaches near the intake for the outlet pipe (3" below the intake). Less frequent cleanout of the water tank will be required to remove accumulated solids that bypass the solids separation tank. Solids removal from the water tank should be performed before the solids accumulation depth reaches the pump intake elevation. Failure to remove solids from the tanks in a timely manner will result in accelerated clogging of the distribution system.

Distribution System Maintenance: Maintenance of the distribution supply line and distribution system will be required periodically and will consist of flushing of the supply line to remove solids build-up and cleaning of any distribution system orifaces that become clogging by solids accumulation. Frequency of required cleanout of these components will be dependent on the efficiency and frequency of tank maintenance.

The quantity and frequency of required solids removal from the system may be reduced by the installation of a small solids trap, cleaned out daily, located between the dairy parlor and the solids separation tank. Removal of solids (manure, waste feed, etc.) from the dairy parlor by methods other than flushing into the drain will also reduce the frequency and quantity of required solids removal from the tanks and distribution system.

SPRINKLER SYSTEM FOR TREATING MILK CENTER WASTE WATER

_____ FARM

_____ COUNTY, ARKANSAS

U.S. DEPARTMENT OF AGRICULTURE
NATURAL RESOURCES CONSERVATION SERVICE

		Date		
Designed			Approved by	
Drawn	R.L.M.	6/95	Title	
Traced			Title	
Checked			Sheet No 2 of 2	Drawing No. AR-ENG-157, Sheet 2

CAD FILE = AR-157S2.2D