Clear Form | Print Form

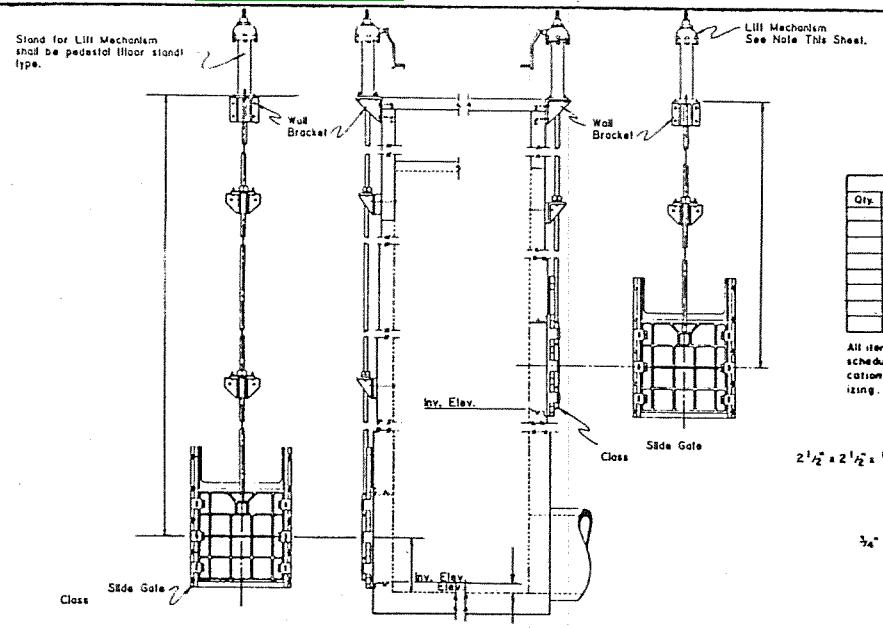


## DETAILS OF SLIDE GATE

Type MMS-2 in accordance with Material Specification.
Flat back frame with compatible square opening, " cast iron wall thimble.
Stainless steel, rising gate stem.
All embedded bolts shall be stainless steel.
Stem diameter, stem guide spacing and lift mechanism shall be in accordance with the manufacturers recommendations and shall meet the requirements of Material Specification.

| SCHEDULE OF MATERIALS FOR LADDER | | |
|---|---|---|
| Qty. | Item | Description |
| | Handrail Section | See Detail |
| | Ladder Section (5') | See Detail |
| | Ladder Bolt | 5/8" X 6" Anchor w/washer |
| | Machine Bolt | 5/8" X 2" w/washer |
| | Ladder Bracket A | See Detail |
| | " " B | " " |
| | " " C | " " |
| | " " D | " " |

All items, (except anchor bolts) in ladder schedule of materials to be galvanized. Complete fabrication of handrails and ladder sections before galvanizing. Anchor Bolts to be stainless steel.

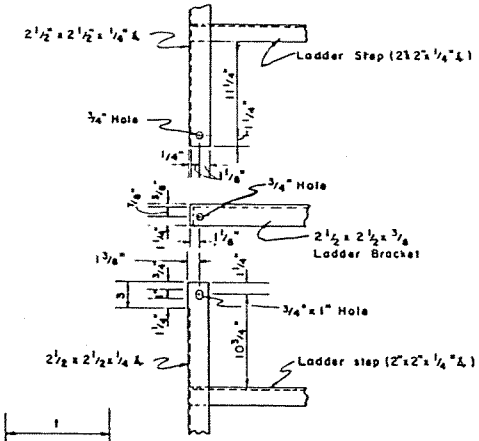


## DETAIL "A"

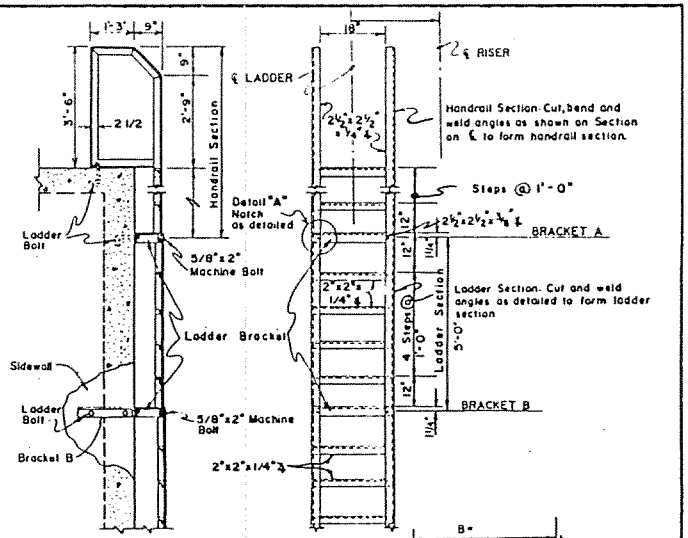


## SECTION ON CENTERLINE

## ELEVATION

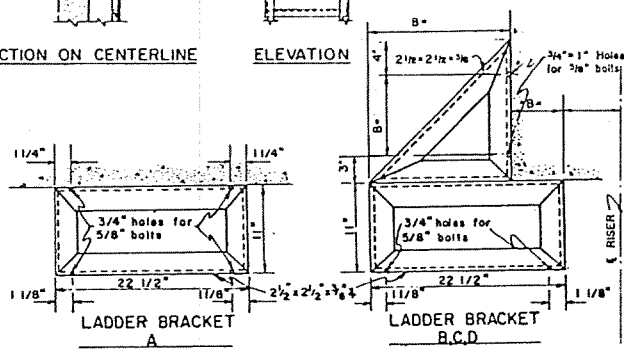


## LADDER BRACKET A

## LADDER BRACKET B,C,D

## LADDER DETAILS

Cut, Bend and weld angle to form ladder bracket. Weld ladder bracket to bottom end of handrail section and each ladder section. Bolt top of ladder section to ladder bracket.

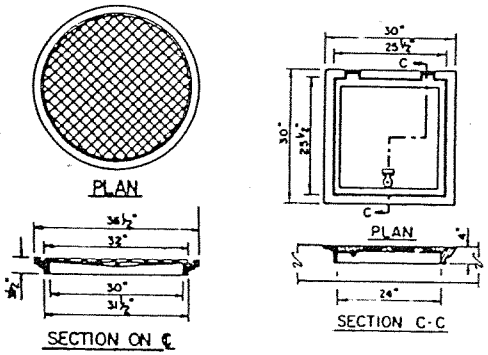


## MANHOLE COVER DETAILS

NOTE: Cover shall be R-6077-A round series with type "H" locking device or R-6660-KH square series with type "T" hinges, and type "G" locking device, manufactured by Neenah Foundry Company, or equal.

NOTE: Metal plate shall be free from dirt, oil, grease, paint, mill scale, loose or thick rust, or other coating which might destroy or reduce its bond with concrete.

Cost of metal plate and installation to be included in unit price for concrete.

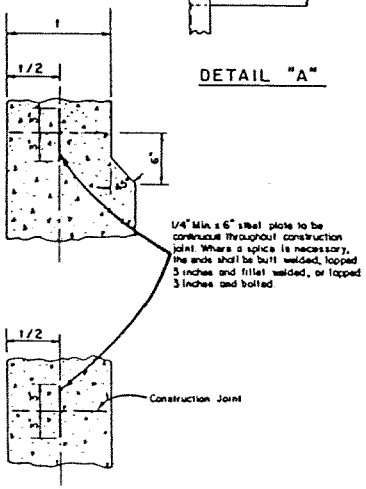


## DETAIL OF PLATE CONSTRUCTION JOINT

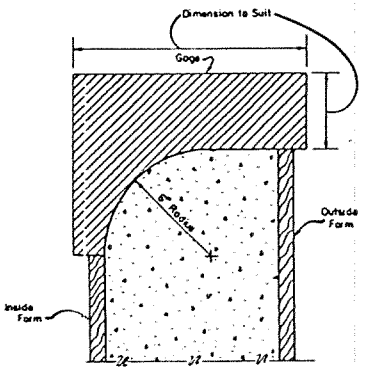


Material - Wood or Sheet Steel - 1 Required. Builder to provide and use gage. Except for bottom gaging edge, shape of gage is at option of builder. Under no circumstances should forms, braces, wallers, etc. be so located as to interfere with the accurate shaping of curved weir section at corners and throughout its entire length.

## WEIR RADIUS GAGE

PRINCIPAL SPILLWAY INLET DETAILS

U. S. DEPARTMENT OF AGRICULTURE
SOIL CONSERVATION SERVICE

Designed ..... Date
Drawn .....
Traced .....
Checked .....
Approved by .....
Title .....
Title .....
Sheet No. of
Drawing No.

SCS-3[illegible]-C(5-44)

AR-ENG-602