Clear Form

Print Form

HEADWALL & SAFETY GUARD FOR PIPE RISERS

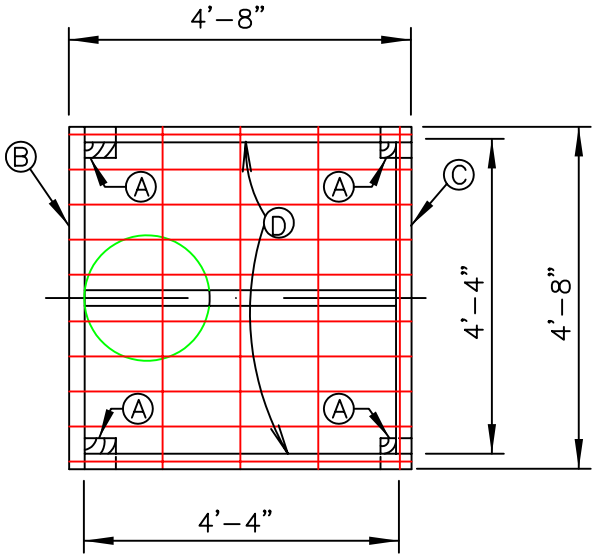

PLAN VIEW

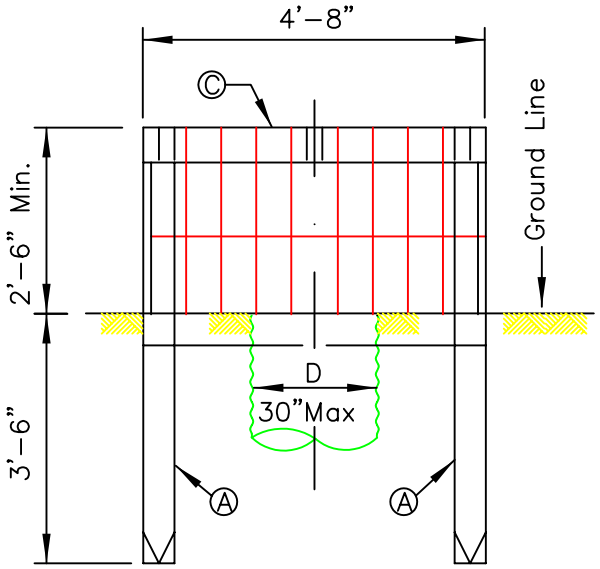

FRONT ELEVATION

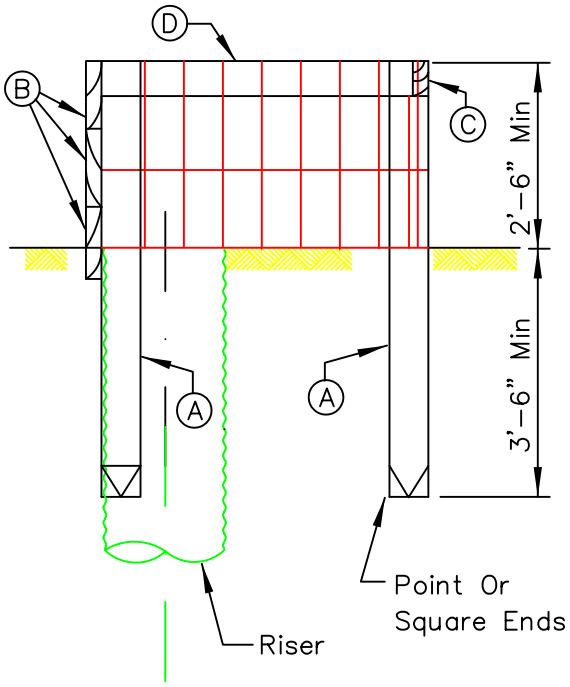

SIDE ELEVATION

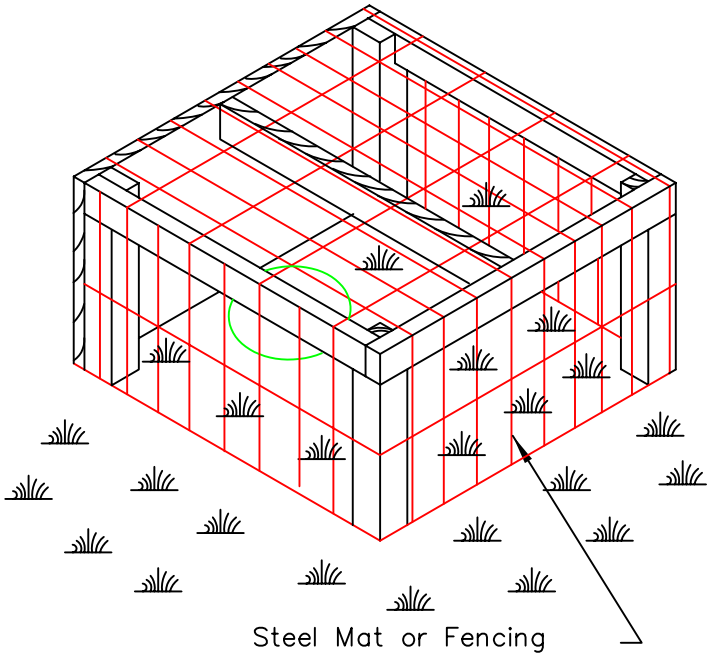

ISOMETRIC VIEW

CAD FILE = AR-204S1.2D

REFERENCE			
Project			
Designed		Date	
Checked		Date	
Approved		Date	

U.S. DEPARTMENT OF AGRICULTURE
NATURAL RESOURCES CONSERVATION SERVICE
ENGINEERING DESIGN SECTION LITTLE ROCK, ARKANSAS
(ADOPTED FROM ILLINOIS IL-576)

STANDARD DWG. NO.
AR-ENG-204
SHEET 1 OF 2
DATE 4-1-94

Clear Form

Print Form

HEADWALL & SAFETY GUARD FOR PIPE RISERS

ESTIMATED QUANTITIES			
MARK	NO.	SIZE	LENGTH
A	4	4" x 4"	6'– 0"
B	3	2" x 12"	4'– 8"
C	1	2" x 6"	4'– 8"
D	3	2" x 6"	4'– 4"
Board Feet – 77			

NOTES:

1. All wood shall be pressure–treated with Chromated Copper Arsenate (CCA) 0.40 lbs./cu. ft. or a pentachlorophenol solution.
2. All joints shall be nailed with spikes using at least 2 in each joint.
3. Posts shall be 4" square, notched as shown, with bottom left square if not driven.
4. The steel mat covering shall be 6x12 style two–way welded galvanized wire fabric or welded galvanized cattle panels with 1/4" rods and 4"x 8" openings. All splices shall be made at the corners. The edge of the mat shall be made at corners. The edge of the mat shall be bent at least 2" around the corners and the mat fasten to the frame by 2" long galvanized staples on 6" centers.

CAD FILE = AR–204S2.2D

REFERENCE
Project _____
Designed _____ Date _____
Checked _____ Date _____
Approved _____ Date _____

U.S. DEPARTMENT OF AGRICULTURE
NATURAL RESOURCES CONSERVATION SERVICE
ENGINEERING DESIGN SECTION LITTLE ROCK, ARKANSAS
(ADOPTED FROM ILLINOIS IL–576)

STANDARD DWG. NO.
AR–ENG–204
SHEET 2 OF 2
DATE 2–18–94