Clear Form

Print Form

CORRUGATED METAL PIPE SUPPORT

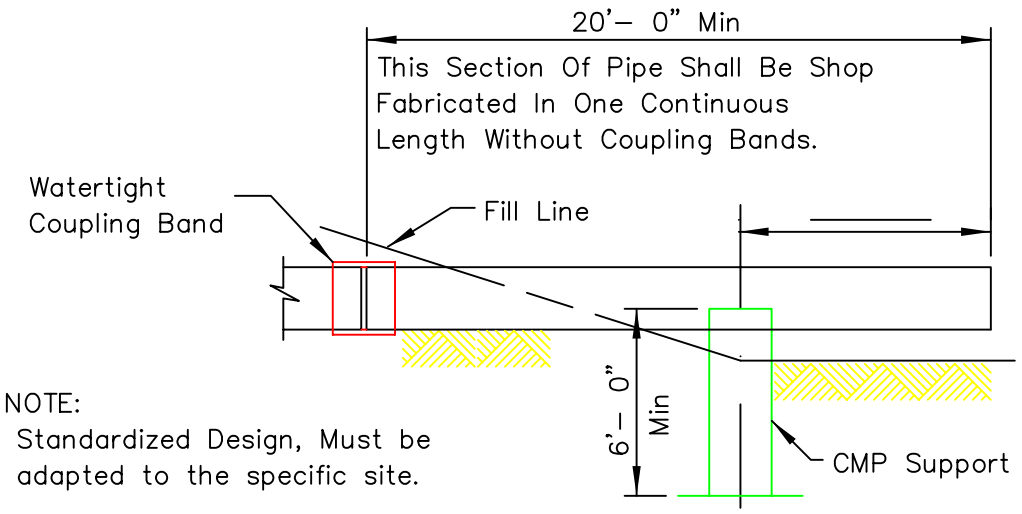

NOTE:
Standardized Design, Must be adapted to the specific site.

SECTION ON CENTERLINE

TABLE OF DIMENSIONS

C.M. PIPE DIA (INCHES)	BOTTOM PLATE (METAL THICKNESS AND GAGE)	VOLUME OF CONC. (CU YDS / LIN FT) OF CMP	7/16" DIA HOLD DOWN ROD LENGTH	3/4" DIA ROD LENGTH
8	.064, 16 GA.	.01	2'–3"	1'–2"
10	.064, 16 GA.	.02	2,–6"	1'–4"
12	.064, 16 GA.	.03	2'–8"	1'–6"
15	.079, 14 GA.	.05	3'–0"	1'–9"
18	.079, 14 GA.	.07	3'–4"	2'–0"
21	.079, 14 GA.	.09	3'–8"	2'–3"
24	.109, 12 GA.	.12	4'–0"	2'–6"
30	.109, 12 GA	.18	4'–8"	3'–0"
36	.138, 10 GA.	.26	5'–4"	3'–6"
42	.168, 8 GA.	.36	6'–0"	4'–0"
48	.188, 7 GA.	.47	6'–7"	4'–6"

BILL OF MATERIAL

Galv Steel CMP____dia,_____lin. ft. Metal Thickness ____ , Gage ____
Galv Steel Bottom Plate _____' _____" x_____' _____" Metal Thickness ____ , Gage ____
3/4 " Dia. Galv Steel Rod _____ feet, threaded 4" on each end with 4 washers and 2 nuts.
7/16" Dia. (min) Galv. Steel Rod _____ feet, with 1/2" dia. (min) upset thread (thread approx. 8")
Galv. Tank Lug – 1 each
Concrete _____ cu. yds.
Steel Reinforcment 6.7 pounds

CAD FILE = AR-213S1.2D

REFERENCE
Project _____
Designed _____ Date _____
Checked _____ Date _____
Approved _____ Date _____

U.S. DEPARTMENT OF AGRICULTURE
NATURAL RESOURCES CONSERVATION SERVICE
ENGINEERING DESIGN SECTION LITTLE ROCK, ARKANSAS
(ADOPTED FROM ILLINOIS IL-586)

STANDARD DWG. NO.
AR-ENG-213
SHEET 1 OF 2
DATE 4-6-94

Clear Form

Print Form

CORRUGATED METAL PIPE SUPPORT

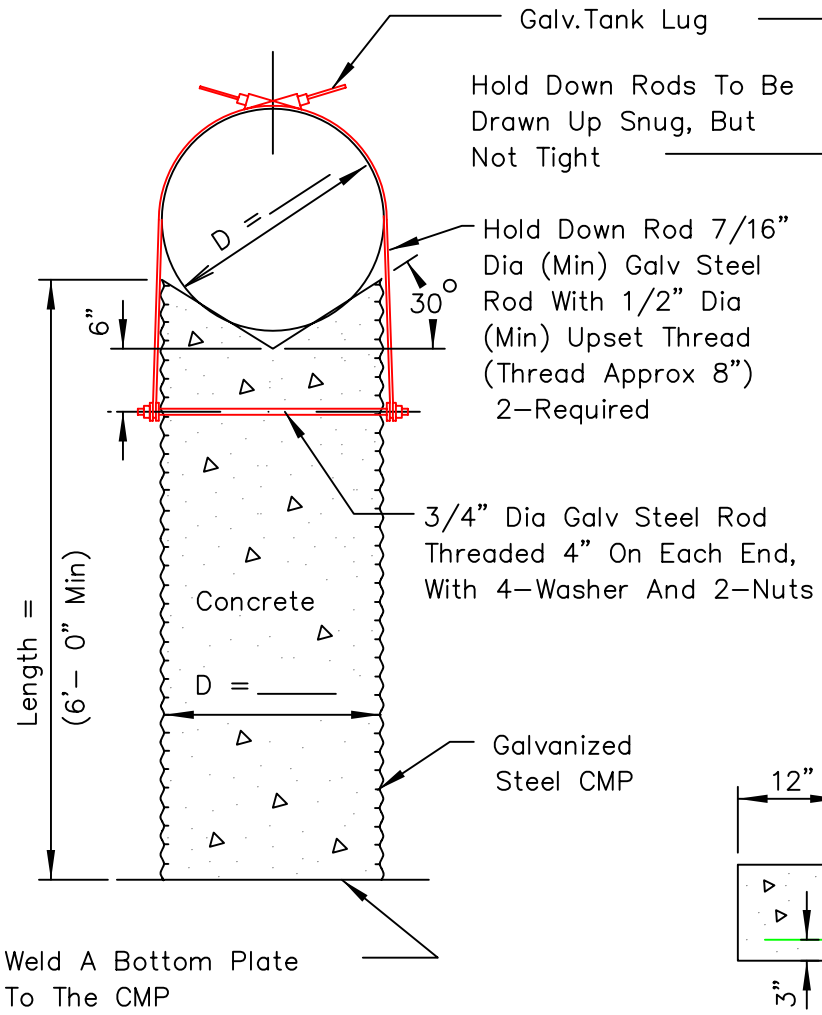

END ELEVATION

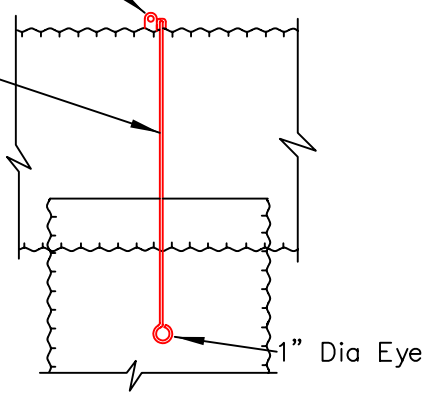

SIDE ELEVATION

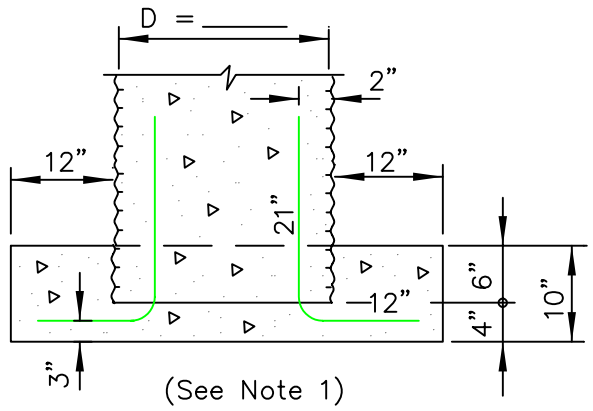

REINFORCED CONCETE BASE

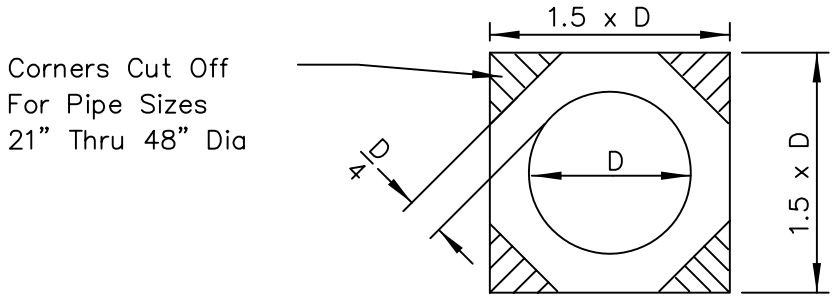

PLAN – BOTTOM PLATE

NOTES:

1. If the pier has to be shortend because of bedrock, a 10" reinforced concrete base must be provided, instead of bottom plate, extending 12" beyond the pipe diameter using 4 – #4 re–bars, 33" long; bent as shown.
2. If principal spillway conduit is aluminum, the surfaces in contact with the concrete shall be seprated with a layer of heavy roofing felt.

CAD FILE = 213S2.2D

REFERENCE			
Project			
Designed		Date	
Checked		Date	
Approved		Date	

U.S. DEPARTMENT OF AGRICULTURE
NATURAL RESOURCES CONSERVATION SERVICE
ENGINEERING DESIGN SECTION LITTLE ROCK, ARKANSAS
(ADOPTED FROM ILLINOIS IL–586)

STANDARD DWG. NO.
AR–ENG–213
SHEET 2 OF 2
DATE 4–6–94