Clear Form Print Form

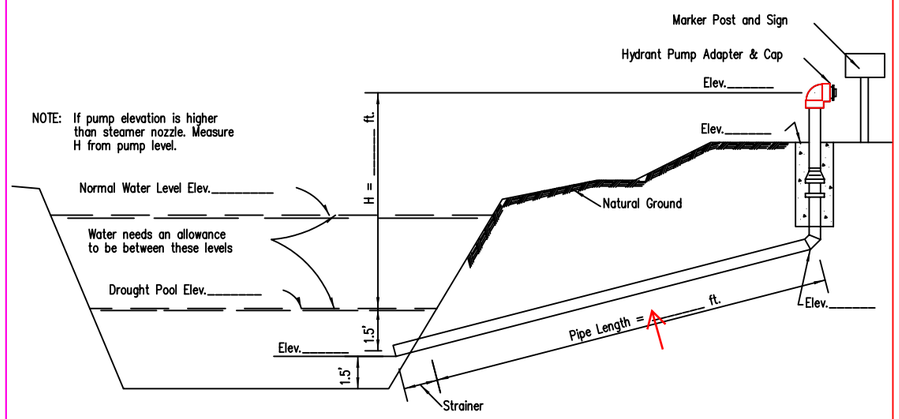

PROFILE OF INSTALLATION

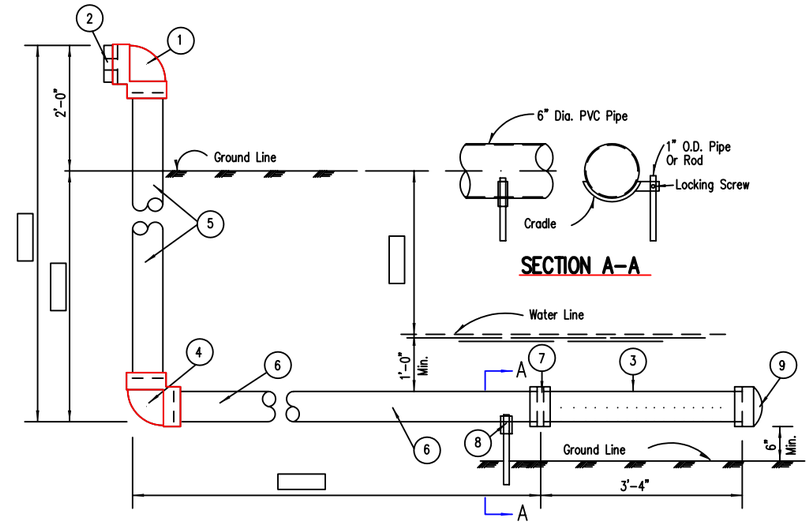

PIPE DETAILS

* Couplings not needed if bell joint pipe is used.

BILL OF MATERIALS

ITEM	MARK	QUAN.	UNIT
Hydrant Assembly	1	1	Each
Hydrant Cap	2	1	Each
6" x 3'-4" PVC Strainer	3	1	Each
6" Sch. 40 PVC Bend	4	1	Each
6" Sch. 40 PVC Pipe-Riser	5		Lin.Ft.
6" Sch. 40 PVC Pipe	6		Lin.Ft.
6" Sch. 40 PVC Pipe Couplings *	7		Each
Underwater Support	8	1	Each
Strainer Cap	9	1	Each
Primer Cleaner			can
PVC Glue			can

QUANTITIES

ITEM		QUAN.	UNIT
Pool			Acres
Drought Pool (50 Year)			Acres
Minimum Draw			Feet
Maximum Draw			Feet
Available Water At Normal Level			Gal.
Available Water At Drought Level			Gal.

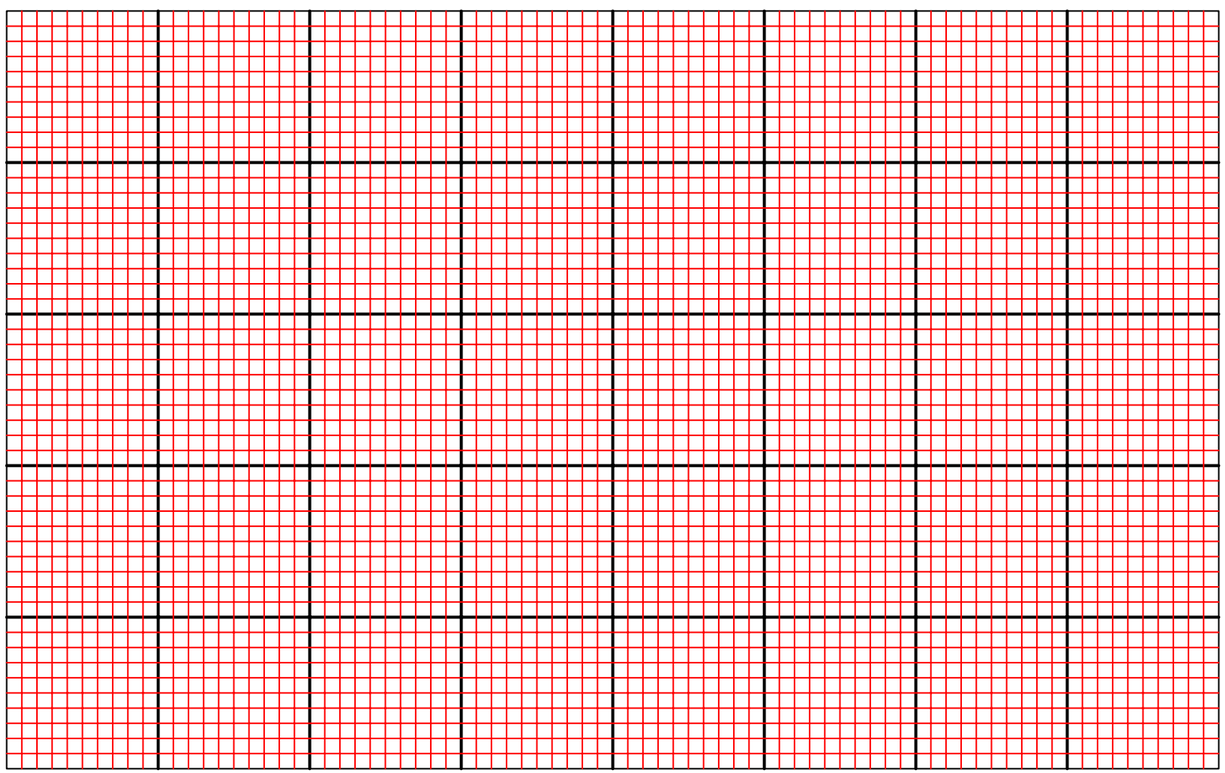

℄ PIPELINE PROFILE

I certify that this practice has been installed in accordance with Standards and Specifications.

_____ _____
Date

POND - DRY HYDRANT

NO. _____

_____ COUNTY, ARKANSAS

PROFILES & LOCATION MAP

U.S. DEPARTMENT OF AGRICULTURE
NATURAL RESOURCES CONSERVATION SERVICE

Date
Designed
Drawn
Traced
Checked

Approved by
Title
Title

Sheet No 1 of 2
Drawing No. AR-ENG-1

CAD FILE = AR-001.2D

Clear Form Print Form

CAD FILE = AR-001.2D

VICINITY MAP

POND – DRY HYDRANT

NO. _____

_____ COUNTY, ARKANSAS

VICINITY MAP

U.S. DEPARTMENT OF AGRICULTURE
NATURAL RESOURCES CONSERVATION SERVICE

	Date		
Designed		Approved by	
Drawn		Title	
Traced		Title	
Checked		Sheet No. 2 of 2	Drawing No. AR-ENG-1