Clear Form | Print Form

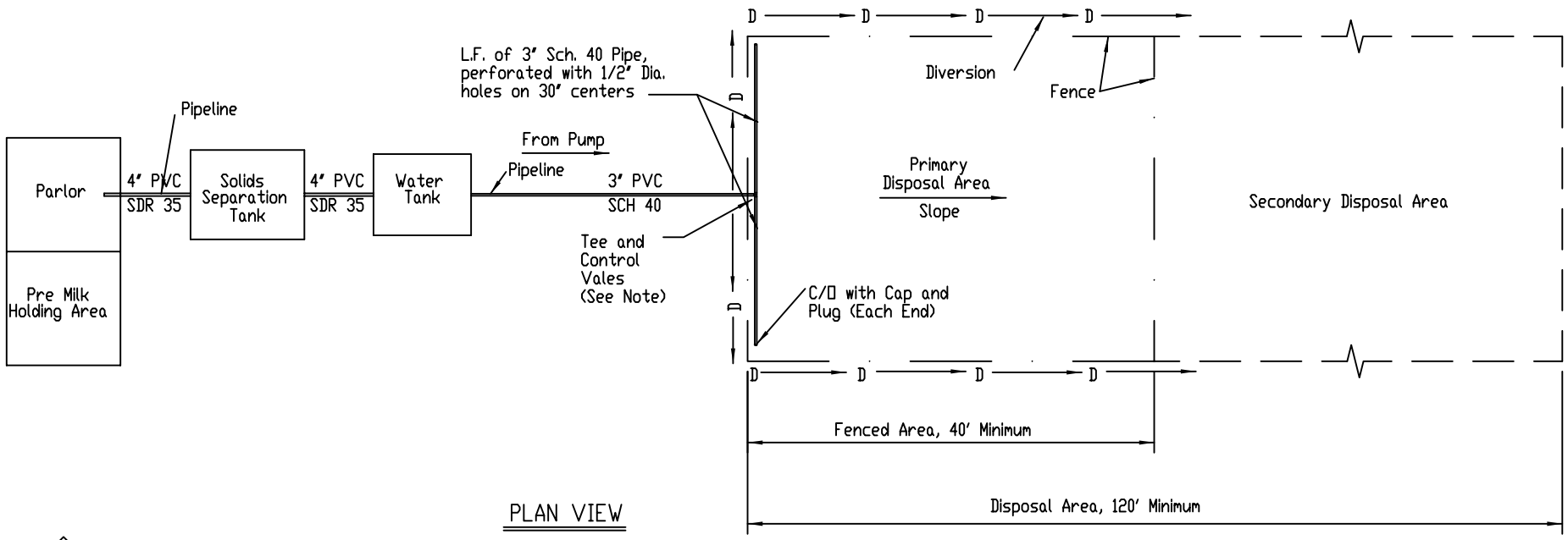

PLAN VIEW

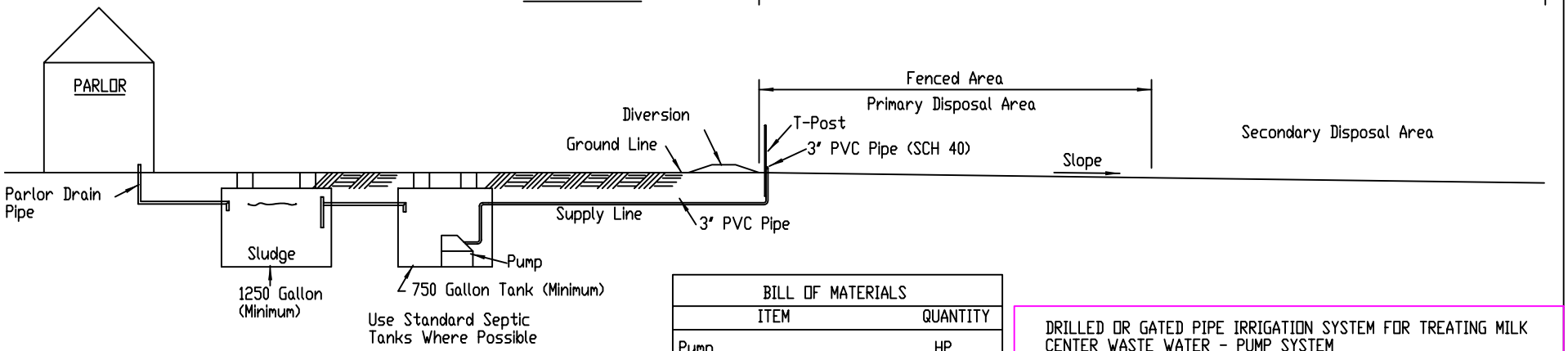

PROFILE

DRILLED OR GATED PIPE IRRIGATION SYSTEM

PUMP SYSTEM

BILL OF MATERIALS		
ITEM	QUANTITY	
Pump	_____	HP
Separation Tank	_____	Gallon
Water Tank	_____	Gallon
4" PVC SDR 35	_____	Lin. Ft.
4" Elbow PVC SDR 35	_____	Each
3" PVC SCH 40 Non-Perf.	____	Lin. Ft.
3" PVC SCH 40 Perforated	____	Lin. Ft.
3" Tee PVC SCH 40	_____	Each
3" Elbow PVC SCH 40	_____	Each
3" Control Valve	1	Each
3" C/O with Cap & Plug	_____	Each
T - Post	_____	Each
2"x2"x1/8" Angle	_____	Lin. Ft.
3/8" U-bolt with Nuts and washers	_____	Lin. Ft.
Metal or Plastic Straps	_____	Each
Fencing	_____	Lin. Ft.

DRILLED OR GATED PIPE IRRIGATION SYSTEM FOR TREATING MILK CENTER WASTE WATER - PUMP SYSTEM

_____ FARM

_____ COUNTY, ARKANSAS

U.S. DEPARTMENT OF AGRICULTURE
NATURAL RESOURCES CONSERVATION SERVICE

		Date	
Designed			Approved by
Drawn	R.L.M.	6/95	Title
Traced			Title
Checked			Sheet No 1 of 3 — Drawing No. AR-ENG-155, Sheet 1

CAD FILE = AR-155S1.2D

Clear Form | Print Form

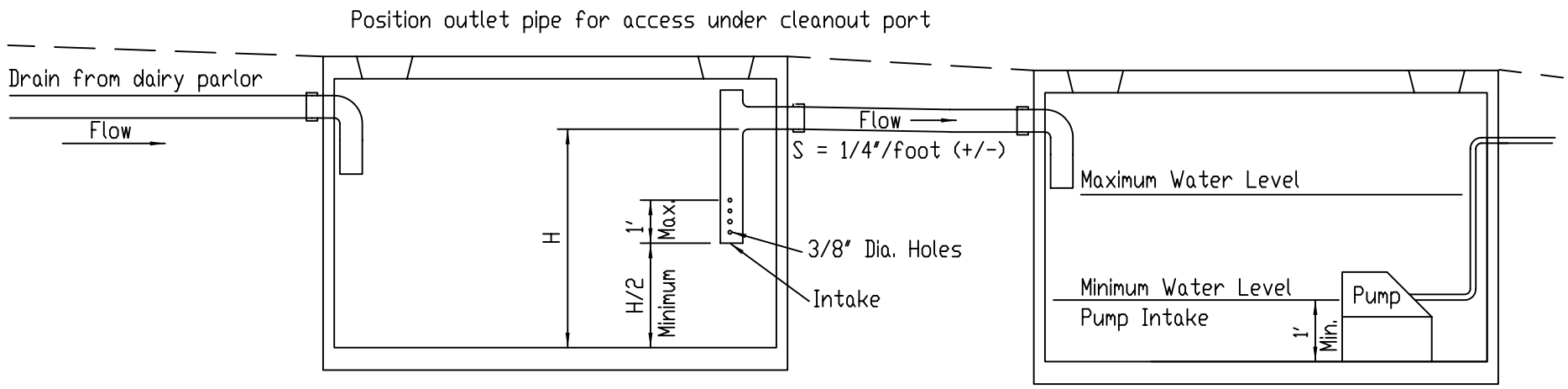

SOLIDS SEPARATION TANK

(Minimum 1250 gallons)

PUMP SYSTEM

WATER TANK

Tank capacity to handle 3 to 5 days of waste water (Minimum 750 Gallon)

Tank Maintenance: Periodic removal of solids from the solids separation tank and water tank will be required to insure satisfactory operation of the system. As a minimum, solids (sludge) should be removed from the solids separation tank when solids level reaches near the intake for the outlet pipe (3" below the intake). Less frequent cleanout of the water tank will be required to remove accumulated solids that bypass the solids separation tank. Solids removal from the water tank should be performed before the solids accumulation depth reaches the pump intake elevation. Failure to remove solids from the tanks in a timely manner will result in accelerated clogging of the distribution system.

Distribution System Maintenance: Maintenance of the distribution supply line and distribution system will be required periodically and will consist of flushing of the supply line to remove solids build-up and cleaning of any distribution system orifaces that become clogging by solids accumulation. Frequency of required cleanout of these components will be dependent on the efficiency and frequency of tank maintenance.

The quantity and frequency of required solids removal from the system may be reduced by the installation of a small solids trap, cleaned out daily, located between the dairy parlor and the solids separation tank. Removal of solids (manure, waste feed, etc.) from the dairy parlor by methods other than flushing into the drain will also reduce the frequency and quantity of required solids removal from the tanks and distribution system.

DRILLED OR GATED PIPE IRRIGATION SYSTEM FOR TREATING MILK CENTER WASTE WATER - PUMP SYSTEM

_____ FARM

_____ COUNTY, ARKANSAS

U.S. DEPARTMENT OF AGRICULTURE
NATURAL RESOURCES CONSERVATION SERVICE

		Date	
Designed			Approved by
Drawn	R.L.M.	6/95	Title
Traced			Title
Checked			Sheet No 2 of 3 — Drawing No. AR-ENG-155, Sheet 2

CAD FILE = AR-155S2.2D

Clear Form | Print Form

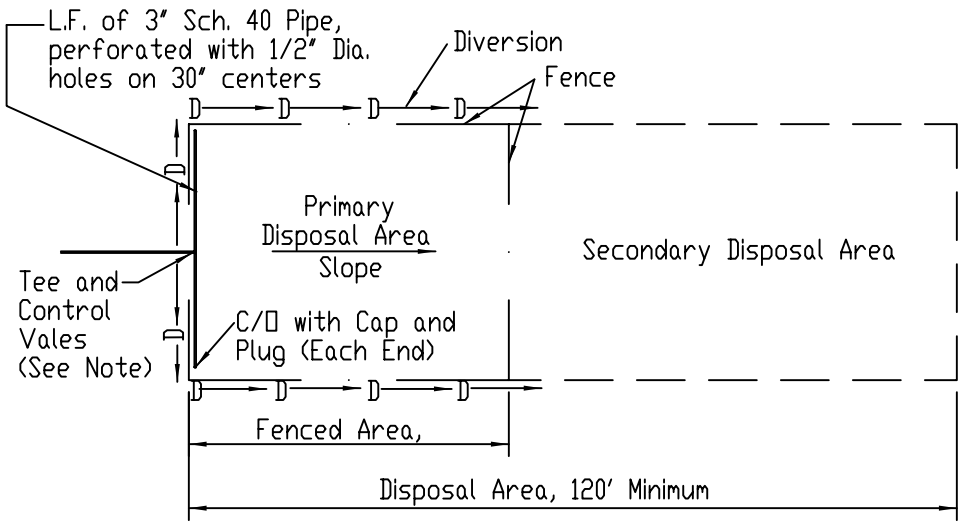

PLAN VIEW

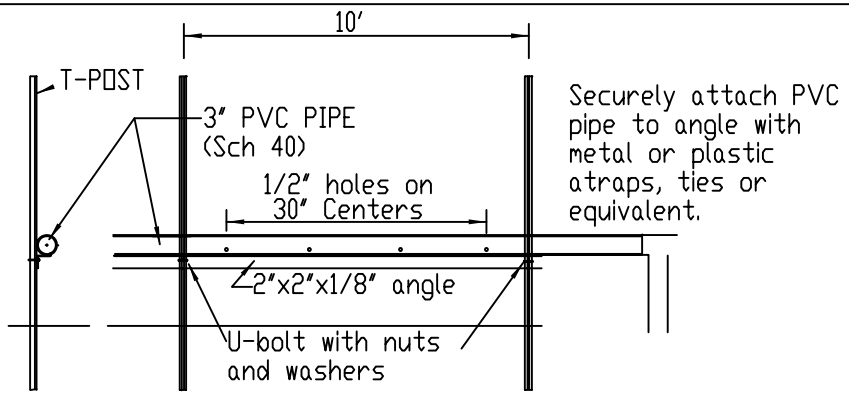

PIPE SUPPORT

NOTE: Grade of dishcarge pipes shall be adjusted as required to insure uniformly distributed flow to the disposal area.

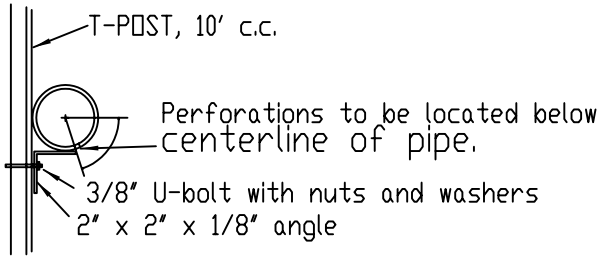

DETAIL - PIPE SUPPORT

Disposal lines (Perforated Pipes) shall be oriented perpendicular to prevailing ground slope.

Ground slope of disposal area shall be not less than 2 percent nor more than 5 percent.

Diversions shall be constructed to divert runoff around primary (fenced) disposal area.

Minimum diversion height shall be 1 foot.

Minimum buffer of 100 feet shall separate the disposal area (both primary and secondary) from streams, etc.

Total perforated pipe length shall equal 2 times the number of cows, equally divided on each side.

Control Valve(s) shall be capable of diverting waste water to either or both discharge lines.

SURFACE DISPOSAL OF MILK CENTER WASTE WATER

DRILLED OR GATED PIPE IRRIGATION SYSTEM FOR TREATING MILK CENTER WASTE WATER - PUMP SYSTEM

_____ FARM

_____ COUNTY, ARKANSAS

U.S. DEPARTMENT OF AGRICULTURE
NATURAL RESOURCES CONSERVATION SERVICE

		Date		
Designed			Approved by	
Drawn	R.L.M.	6/95	Title	
Traced			Title	
Checked			Sheet No 3 of 3	Drawing No. AR-ENG-155, Sheet 3

CAD FILE = AR-155S3.2D