Clear Form

Print Form

CAD FILE = AR-501.2D

REV.3-19-96

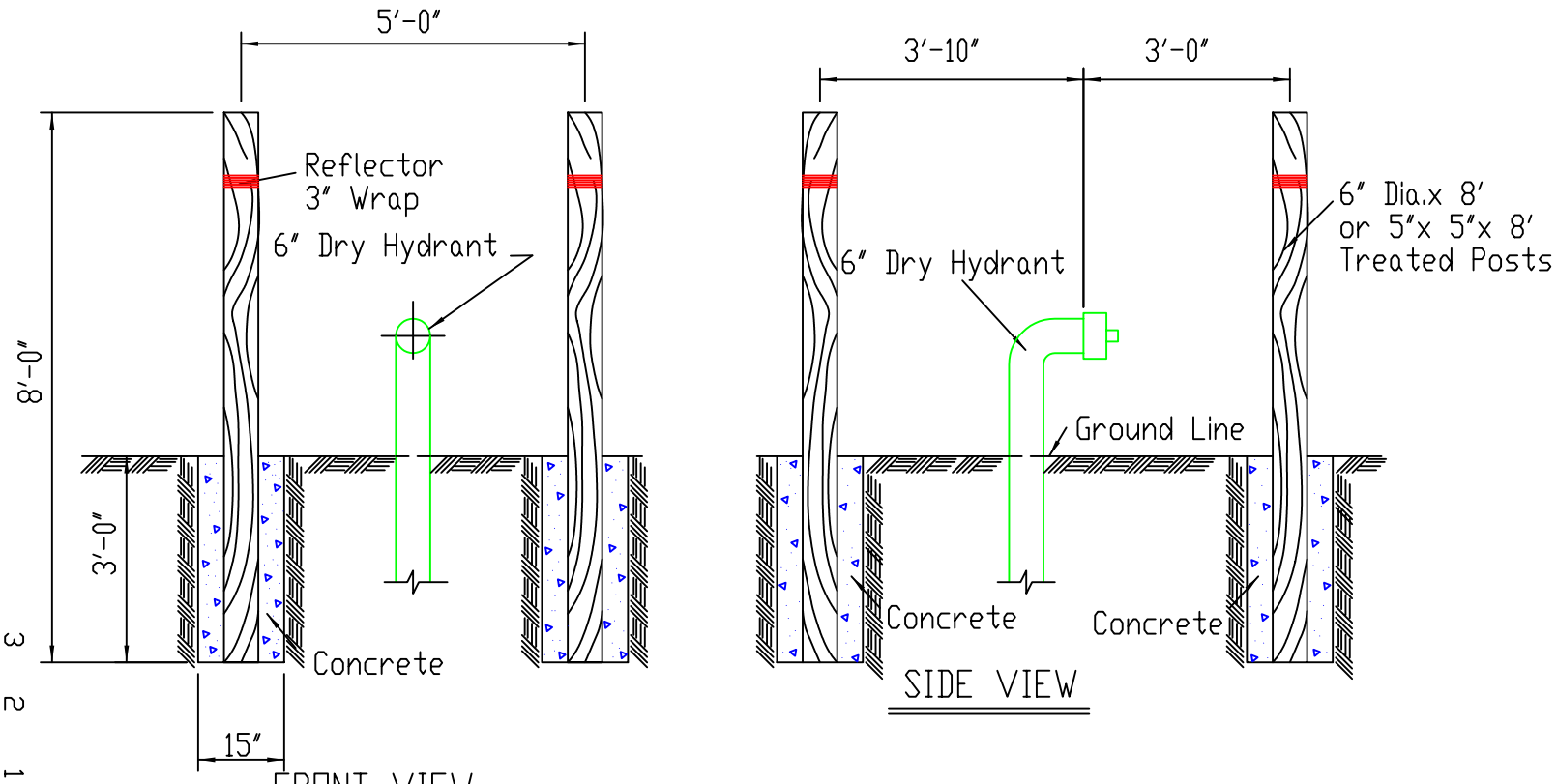

WOOD CONSTRUCTION

GUARD STRUCTURE FOR DRY HYDRANT

NOTE: All wood products shall be protected with 0.04 cc pressure treatment of ground contact preservative. Concrete shall have a minimum crushing strength of 1500 psi (Sack mix concrete is satisfactory when mixed according to manufacturers recommendations). Reflectors shall be a minimum of 3 inches wide and shall be constructed of weather proof materials that wrap around each specified guard post so as to produce reflections in the front and on the side of the post.

SCALE 3 2 1 0 1 5 IN FEET

GUARD STRUCTURE FOR DRY HYDRANT
TYPE-W NO SUPPORT

REFERENCE

Project ____ Date ____

Designed ____ Date ____

Checked ____ Date ____

Approved ____ Date ____

U.S. DEPARTMENT OF AGRICULTURE
NATURAL RESOURCES CONSERVATION SERVICE
ENGINEERING DESIGN SECTION LITTLE ROCK, ARKANSAS

STANDARD DWG NO. AR-ENG-501

SHEET 1 OF 1

DATE 11-91