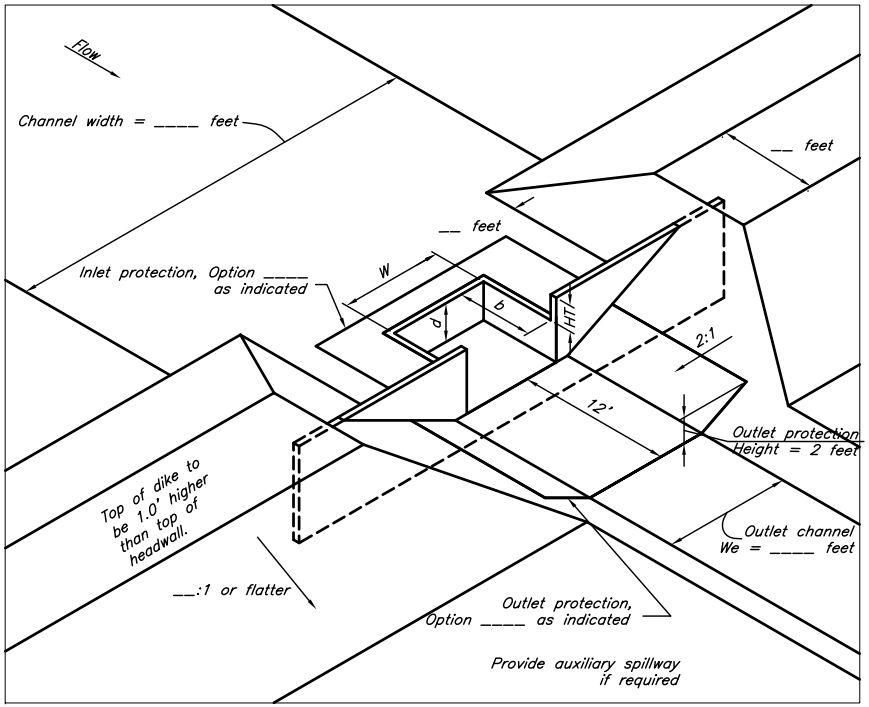

Drainfill Gradation Requirements

Sieve No.	% Passing
3/8"	100
4	95–100
8	80–100
16	50–85
30	25–60
50	5–30
100	0–10
200	0–5

Material passing the No. 200 sieve shall be non–plastic.

Riprap Gradation Requirements

Riprap Size (in)	Gradation (if used) % Passing
15	100
9	60–100
6	35–50
3	10–40
1 1/2	10

Table of Quantities

Item	Unit	Quantity
Excavation	cu.yds	
Earthfill	cu.yds	
Concrete (structure only)	cu.yds	
Reinforcing steel	lbs.	
Drainfill	tons	
Goetextile, nonwoven	sq.yds.	
PVC pipe, Sch. 40, 2–inch dia.	feet	
Inlet protection, Option ____		
Outlet protection, Option ____		
Seeding	acres	

Bench mark description _____

_____

Elevation _____

Notes:
1. Provide 2–foot deep footing on downstream end of outlet protection when using Option A.
2. Provide 3/4–inch preformed expansion joint filler between structure and concrete slabs when using Option A for inlet or outlet protection.
3. Bedding material as shown on Option A is required only for moderate to high shrink swell potential soils.
4. Provide 1–foot deep vertical imbedding of filter fabric on all edges of inlet and outlet protection when using Options B or C.

(Drawings not to scale)

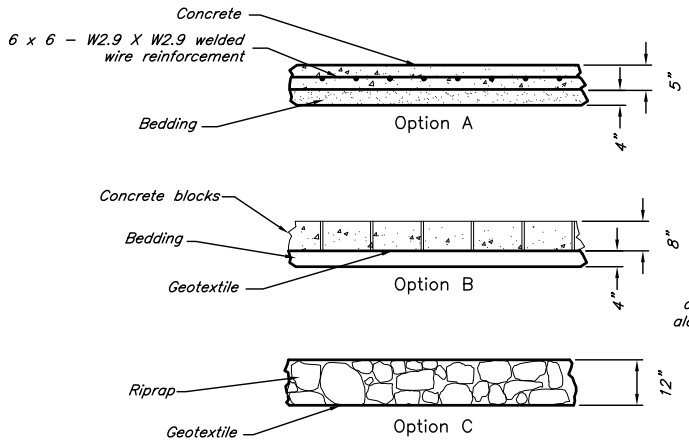

Inlet and Outlet Protection Details

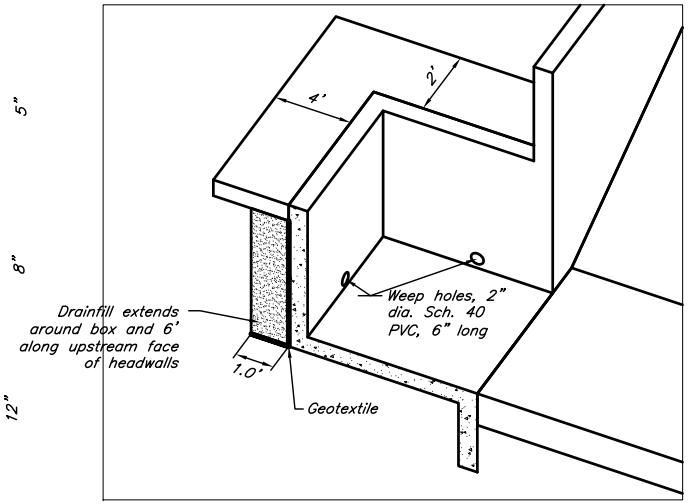

Reinforced Concrete Box Drop Spillway

Before any investigation or construction activity, the excavator is responsible for calling KANSAS ONE–CALL at 800–344–7233 (800–DIG–SAFE) or 811

Date
Designed
Drawn
Checked
Approved

NRCS
Natural Resources Conservation Service
United States Department of Agriculture

Drawing Name

6/3/11 7:59 AM
Sheet of