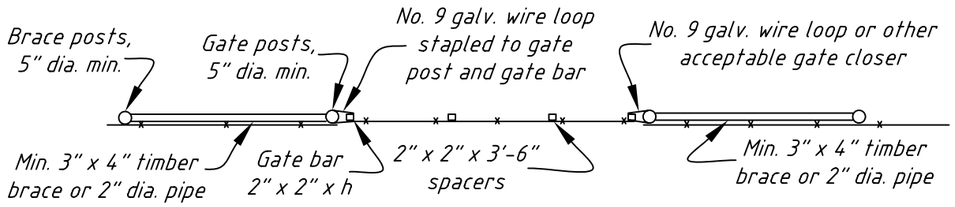

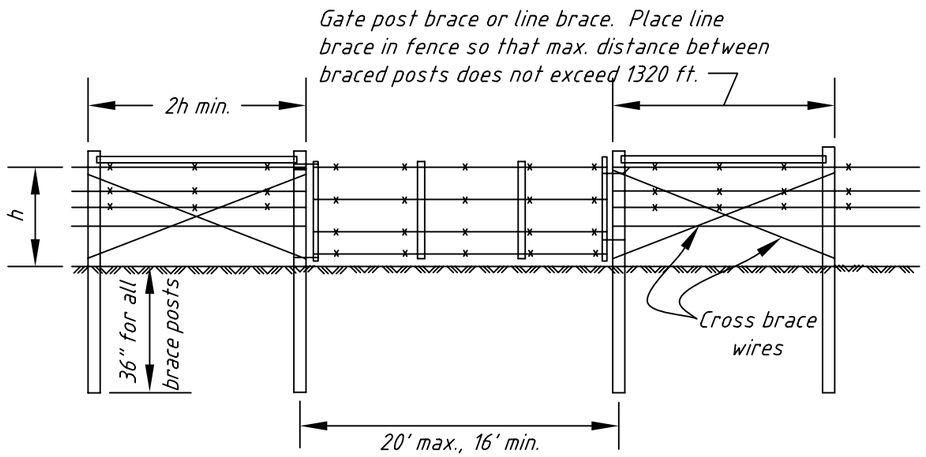

GATE SECTION

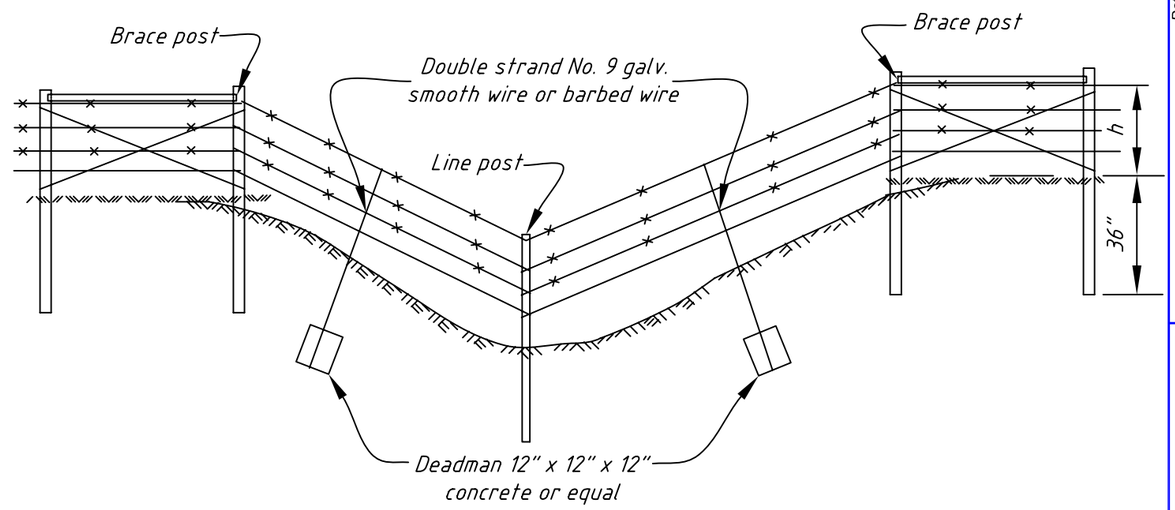

LINE FENCE ACROSS NARROW DRAWS

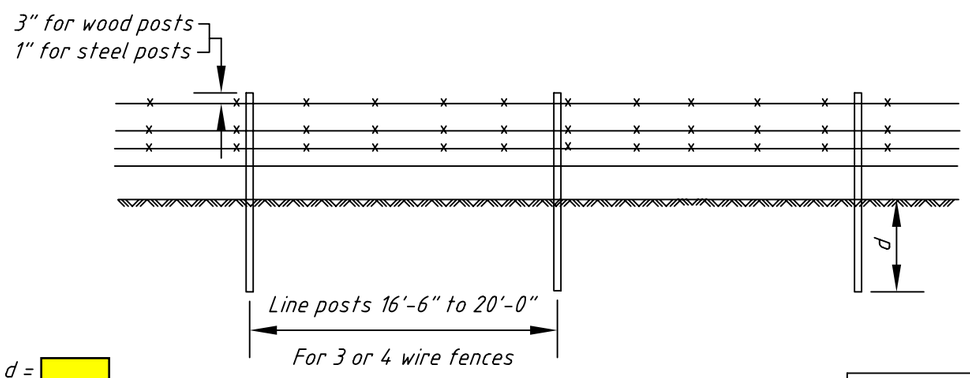

d = _____

h = _____

No. of wires = _____

Line post length = _____

Brace post length = _____

Stays (are/are not) required

Wire spacing from ground (in.) = _____ - _____ - _____ - _____

Wire type: barbed (b), barbless (bl) = _____ - _____ - _____ - _____

LINE FENCE SECTION

Depth d (inches)	
Line Wood Posts	Line Steel Posts
30"	22"

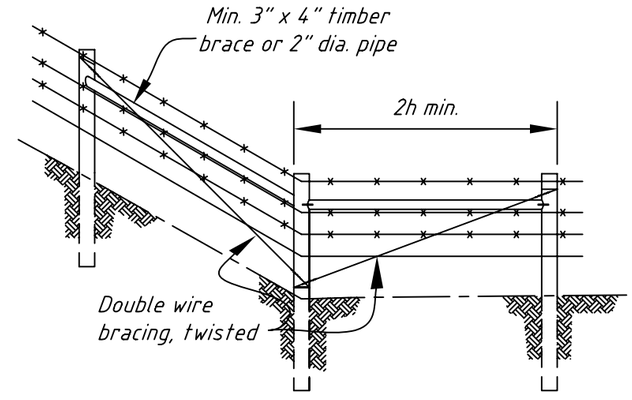

HORIZONTAL CORNER BRACE SECTION

NOTES:

1. For additional details, refer to Standard Barbed and Barbless Fence Specification 382(a).

Date

Designed

Drawn

Checked

Approved

Cooperator:

County Conservation District

County, Wyoming

4 STRAND POST AND WIRE FENCE

USDA NRCS

Natural Resources Conservation Service

File No.

Drawing No. 382A

Sheet of