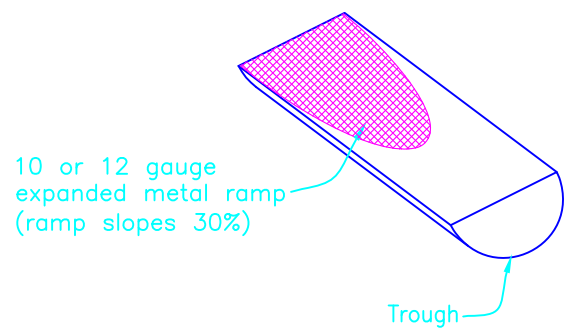

RAMP DETAILS

NOT TO SCALE

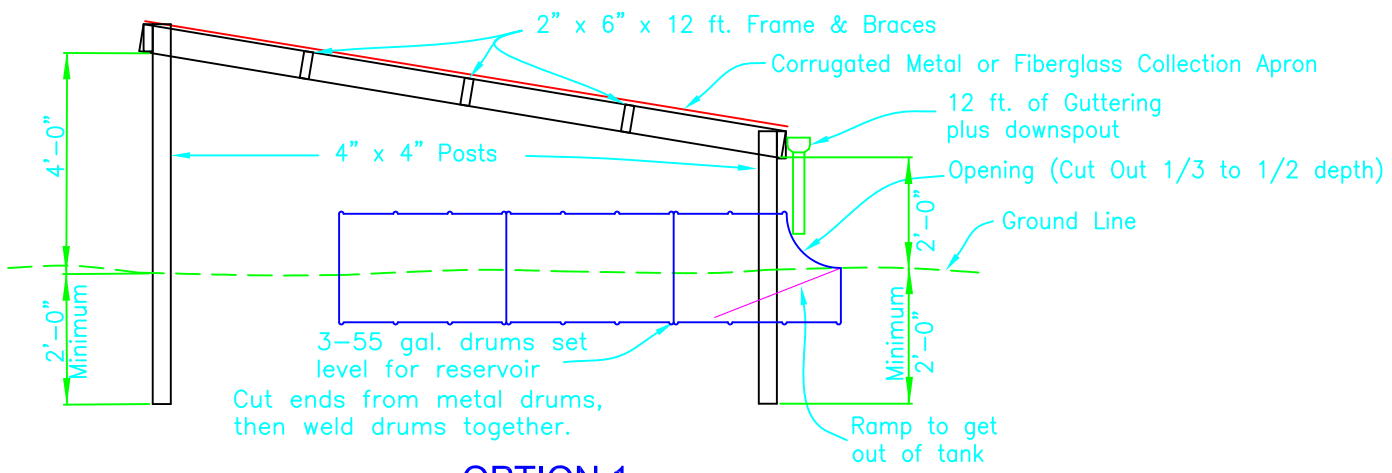

OPTION 1

(3) 55 GALLON METAL DRUMS WELDED TOGETHER

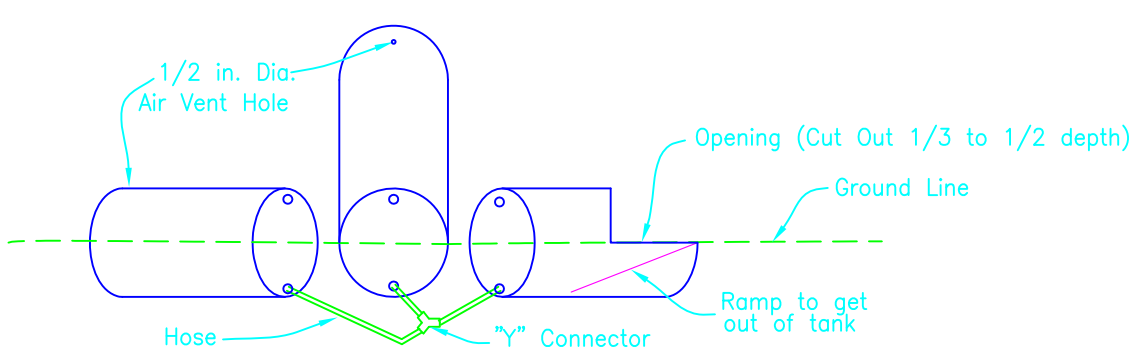

OPTION 2

PLASTIC BARRELS INTERCONNECTED WITH 'Y' CONNECTOR

TYPICAL SECTION

NOT TO SCALE

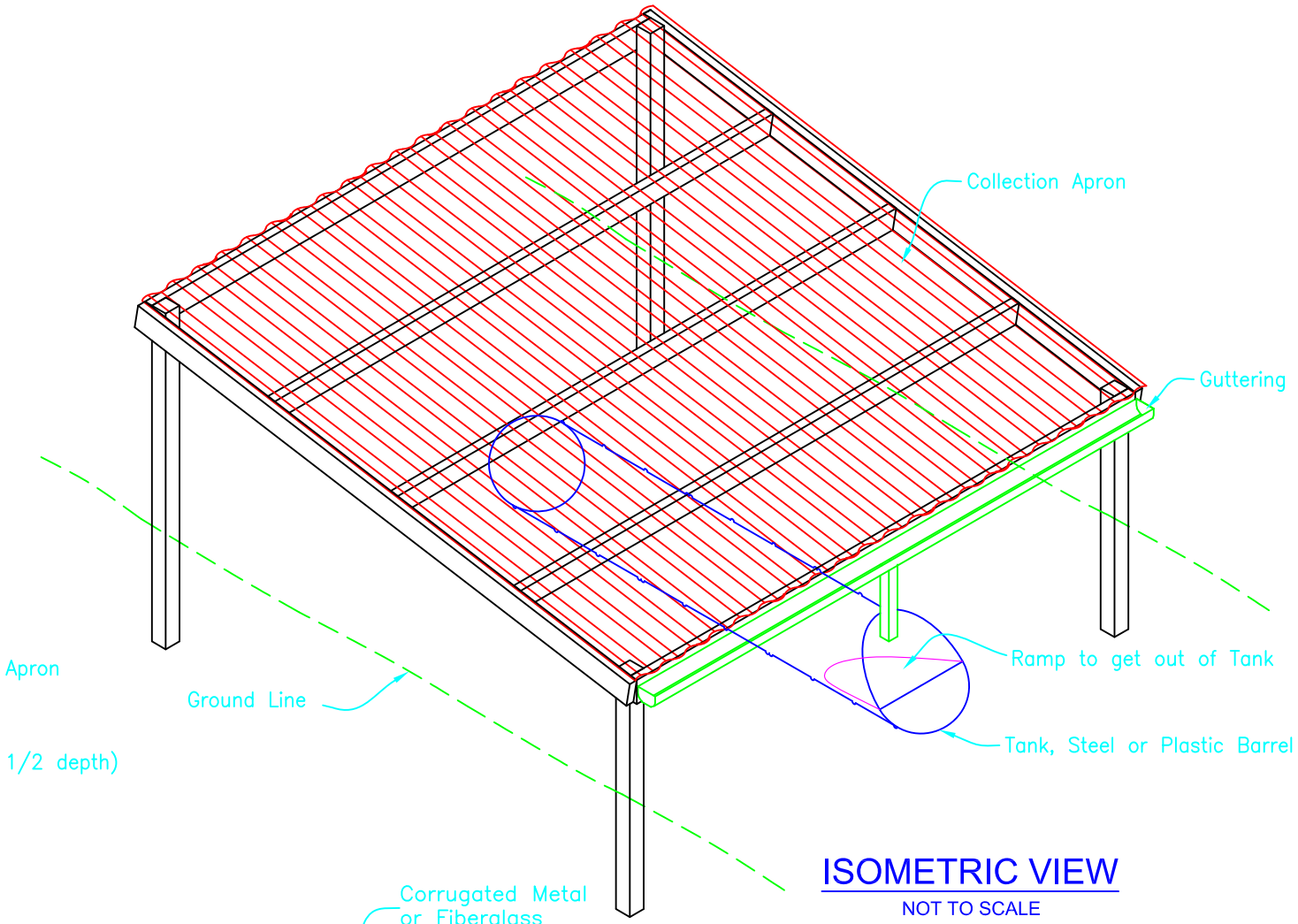

ISOMETRIC VIEW

NOT TO SCALE

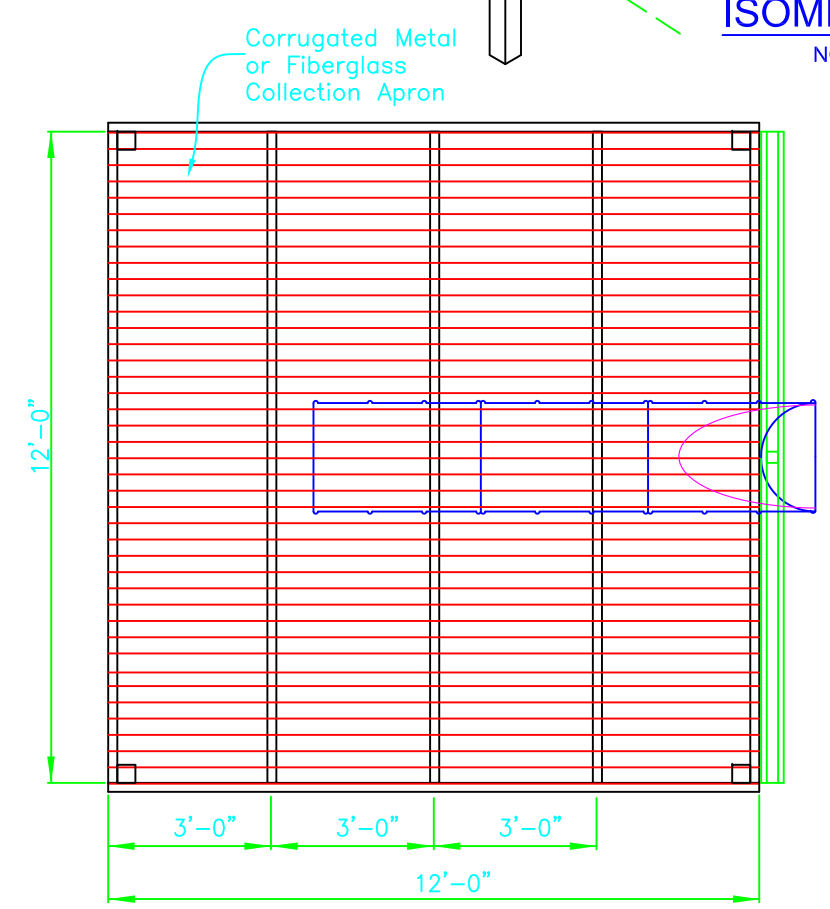

PLAN VIEW

NOT TO SCALE

DESIGNED		DATE
DRAWN	R M PETRICK	DATE 10/27/2010
CHECKED		DATE
APPROVED		DATE

WYOMING STANDARD DRAWING

WILDLIFE GUZZLER

TYPE C

NRCS
Natural Resources Conservation Service
United States Department of Agriculture

File Name

Drawing Number

636-3

SHEET 3 of 5