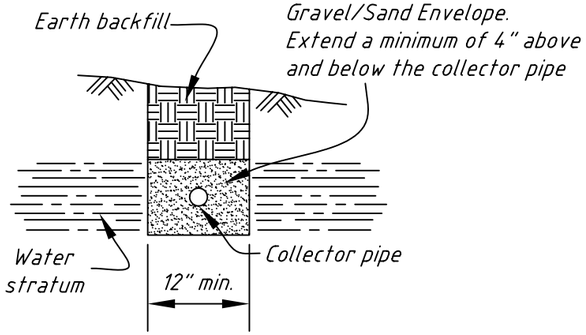

TRENCH DETAIL

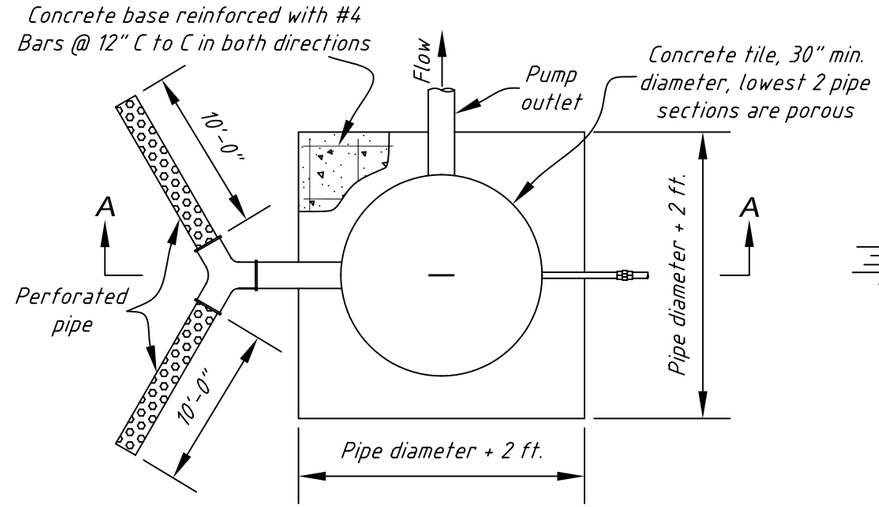

Plan

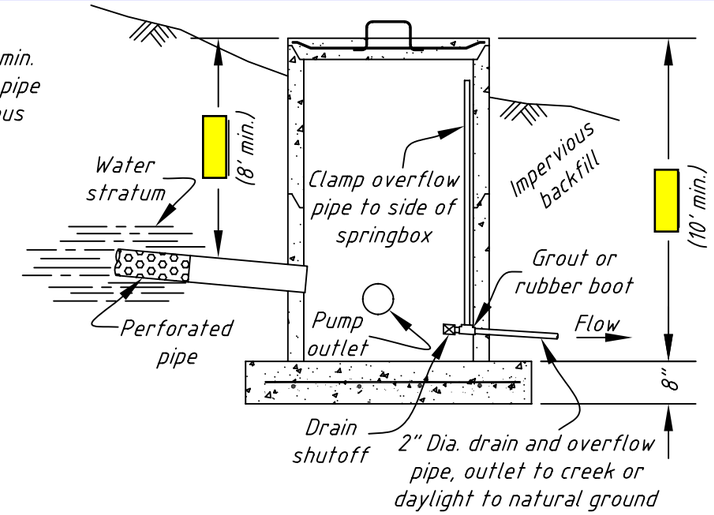

Section A-A

SPRING BOX DETAILS

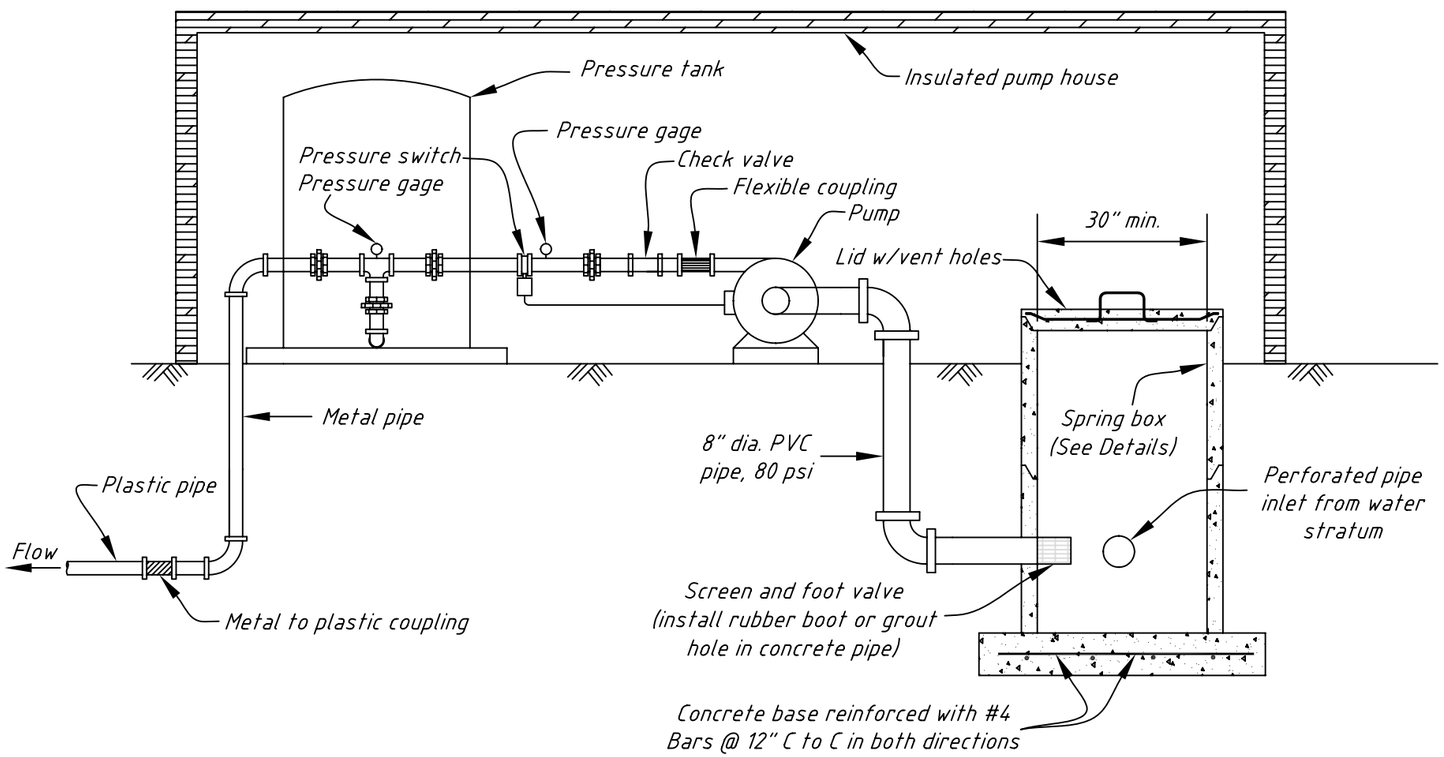

SPRING BOX SECTION & PUMP MANIFOLD

TABLE OF QUANTITIES

Item	Pipe Type	Dia. (in.)	Unit	Quantity
Spring Box			Ft.	
Perforated Pipe			Ft.	
Overflow/Drain Pipe			Ft.	
8" Dia., PVC Pipe, 80 psi.	PVC		Ft.	
Sand/Gravel Envelope	------		C.Y.	
Concrete	------		C.Y.	

Notes:

1. Place perforated pipe sections within the water bearing strata.
2. Provide air passage inot spring box by placing three ½" holes in cover.
3. HDPE corrugated pipe or corrugated metal pipe may be used for the spring box in lieu of concrete pipe.

Date

Designed

Drawn

Checked

Approved

Cooperator:

Spring Development with Pump Manifold Outlet

County, Wyoming

County Conservation District

USDA NRCS

Natural Resources Conservation Service

File No.

Drawing No.

574-02

Sheet of