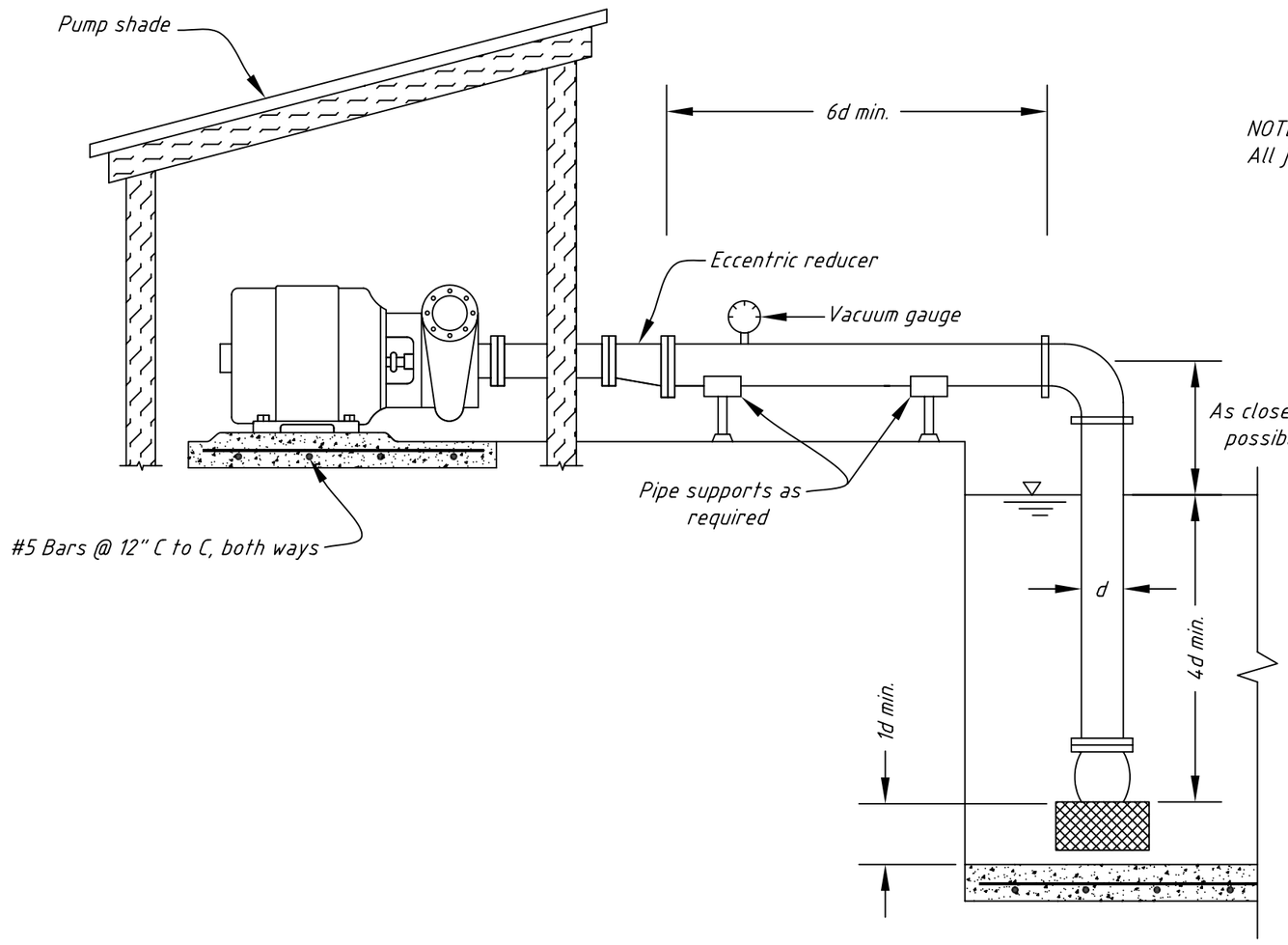

NOTE:
All joints under vacuum shall be watertight.

TYPICAL PUMP SUCTION DETAIL

(Station _____)

Date

Designed

Drawn

Checked

Approved

Cooperator:

Pump Suction Detail

County, Wyoming

County Conservation District

USDA NRCS

Natural Resources Conservation Service

File No.

Drawing No.
430-08

Sheet of