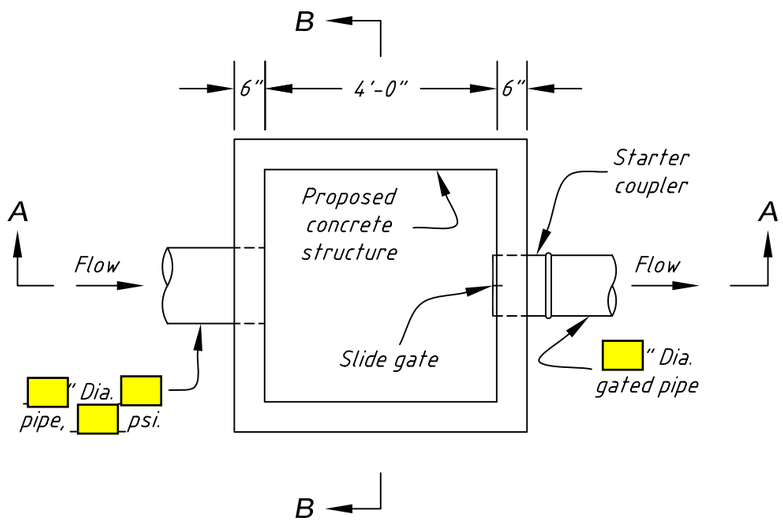

PLAN VIEW

d	Concrete Volume (c.y.)
4'	1.9
4.5'	2.0
5.0'	2.2
5.5'	2.4
6.0'	2.5
6.5'	2.7
7.0'	2.9
7.5'	3.0
8.0'	3.2

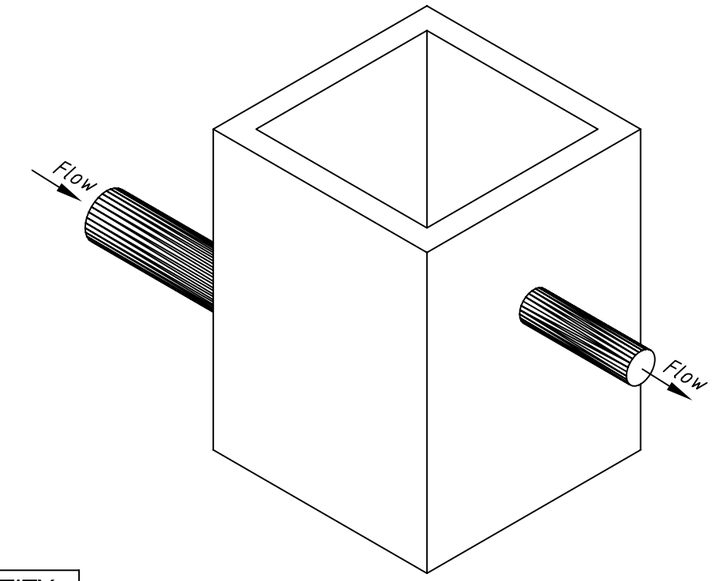

Note: Water control gate not shown

ISOMETRIC

TABLE OF QUANTITIES

ITEM	UNIT	QUANTITY
Concrete	C.Y.	
Reinforcement (Estimated at 110 lbs/c.y.)	LBS.	
Slide Gate, Model or equivalent	EA.	1

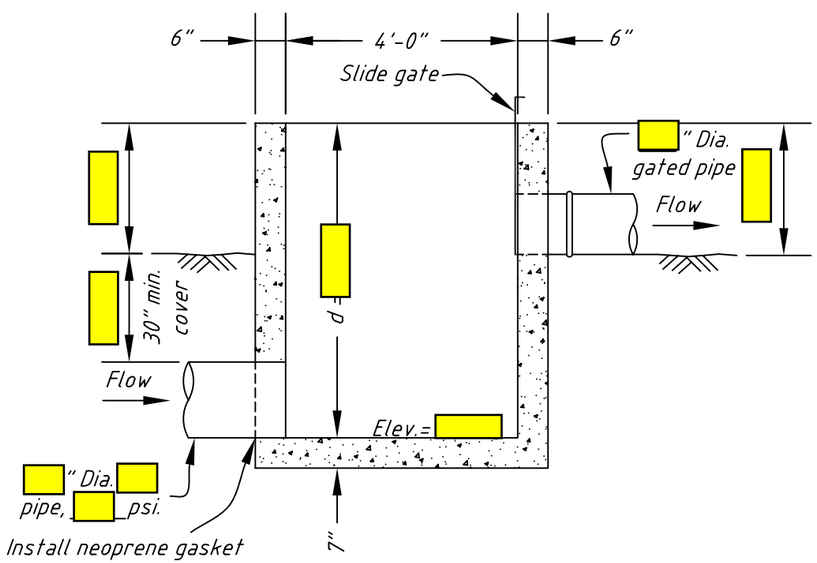

SECTION A-A

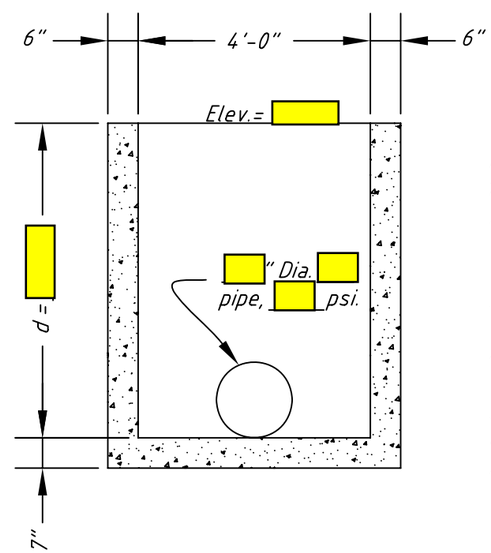

SECTION B-B

NOTES:

1. Concrete shall be Class 4000.
2. Steel reinforcement shall be provided throughout the entire structure using #4 Bars @ 10" C to C, both horizontally and vertically.
3. Minimum cover over reinforcement shall be 2" from formed surfaces and 3" from unformed surfaces.
4. All horizontal steel shall extend around the corners of the structure a minimum of 15 inches.
5. Lap splices shall be be a minimum of 15 inches.
6. The distance "d" shall not exceed 8 feet.
7. This drawing is NOT applicable for backfill conditions that may become saturated.

(Not to Scale)

Date

Designed

Drawn

Checked

Approved

Cooperator:

Concrete Water Control Structure

County, Wyoming

County Conservation District

USDA NRCS

Natural Resources Conservation Service

File No.

Drawing No. 587-08

Sheet of