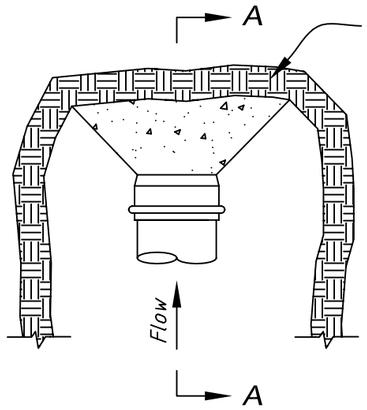

DEAD END

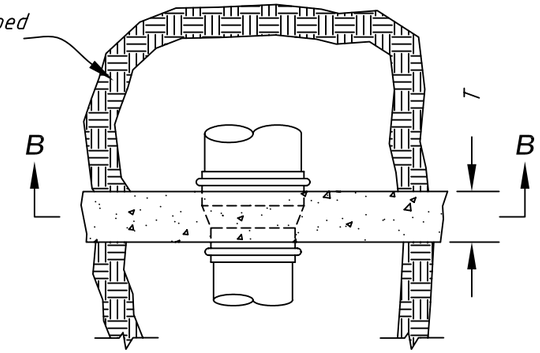

Note: T=8" min. for reducers 10" and less.
T=10" min. for reducers 12" to 18".

REDUCER

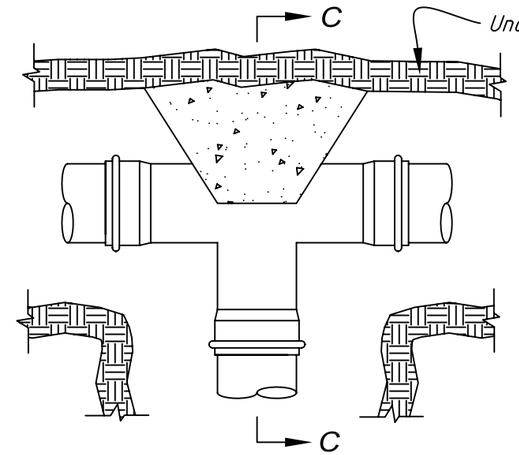

TEE OR WYE

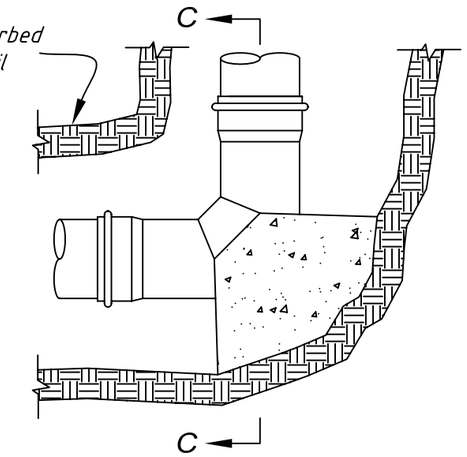

BEND

PLAN VIEW - THRUSTBLOCK TYPES

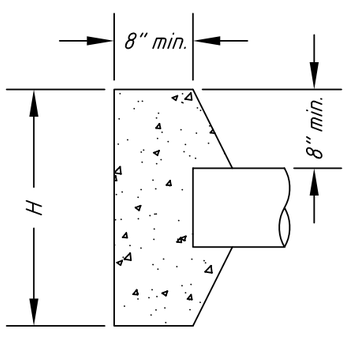

SECTION A-A

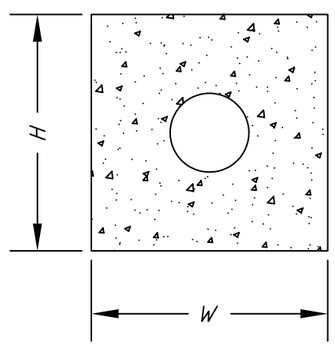

SECTION B-B

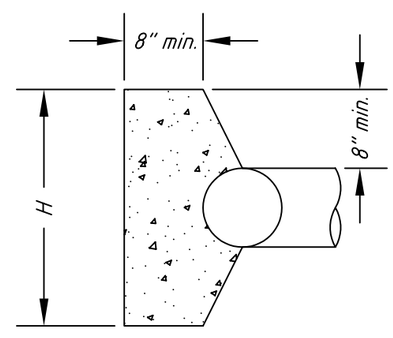

SECTION C-C

TABLE OF QUANTITIES

STATION	TYPE OF BLOCK	DIMENSIONS		CONCRETE VOLUME (Cu. Ft.)
		H (in.)	W (in.)	

NOTES:

1. Minimum concrete compressive strength at 28 days shall be 2,000 psi.
2. Concrete thrustblocks shall extend a minimum of 8" beyond the outside of the pipeline and be poured against undisturbed earth.
3. Thrustblock area shall be approximately square.

Date
Designed
Drawn
Checked
Approved

Cooperator:
Concrete Thrustblock Details
County, Wyoming
County Conservation District

USDA NRCS
Natural Resources Conservation Service

File No.

Drawing No.
430-07

Sheet of