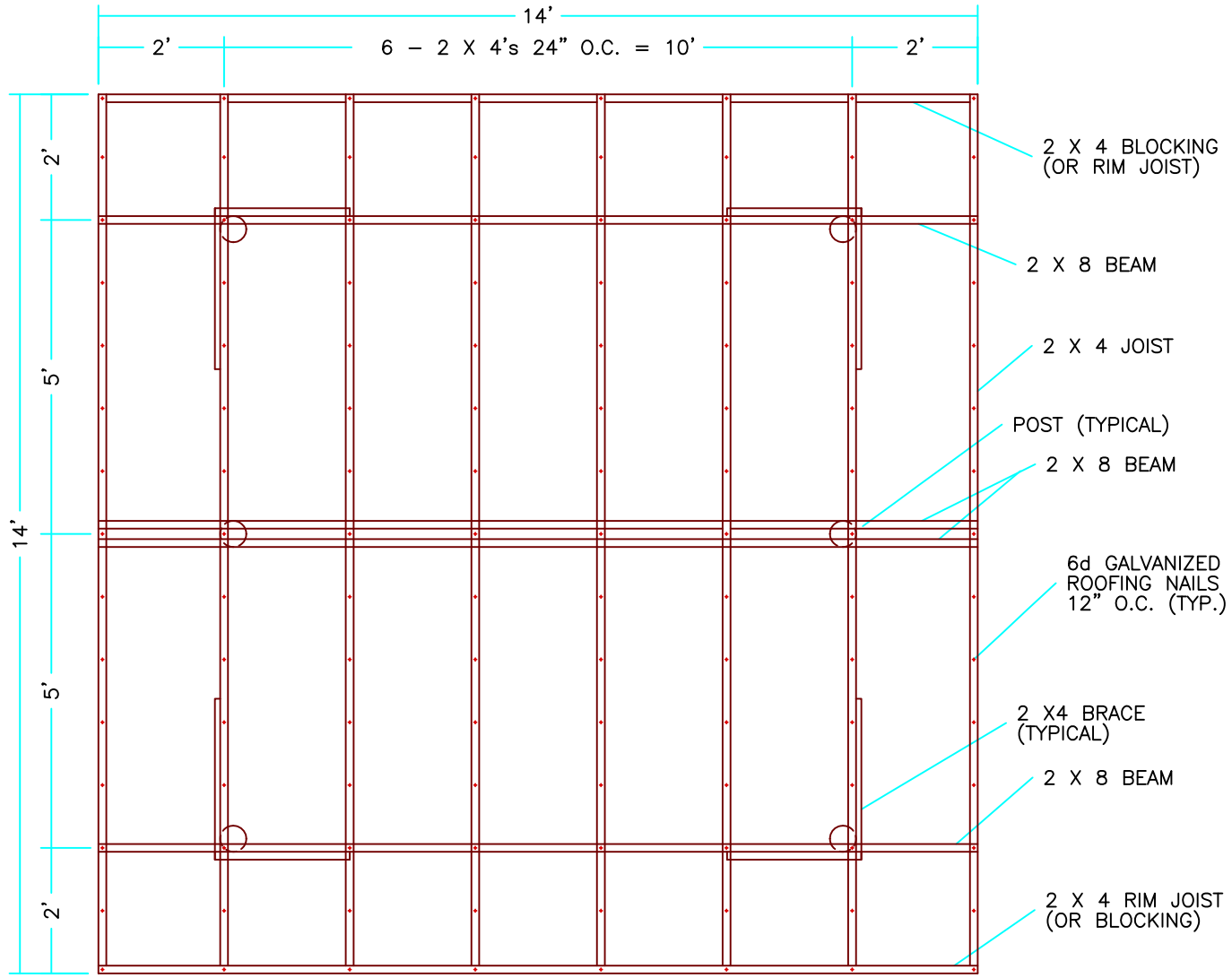

ROOF FRAMING PLAN

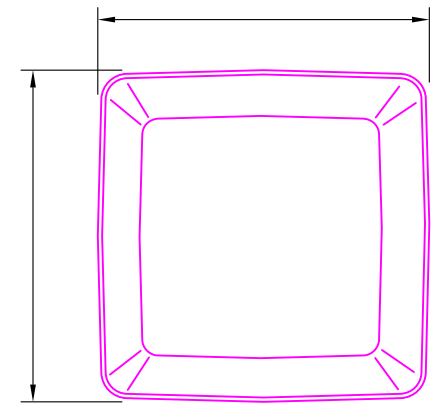

PLAN VIEW - STORAGE TANK

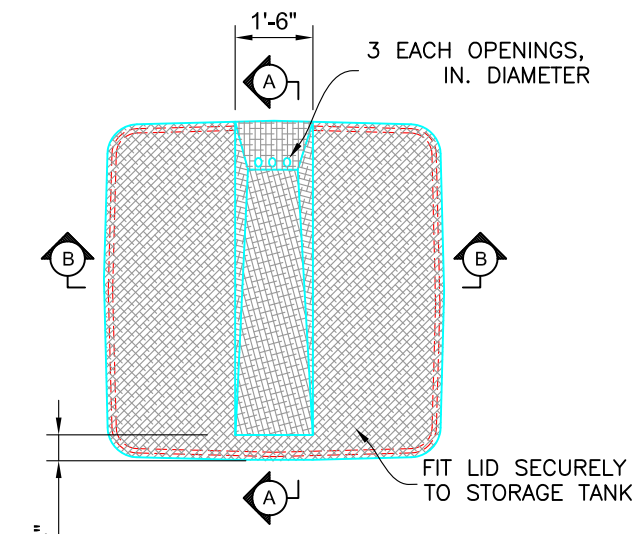

PLAN VIEW - LID & RAMP

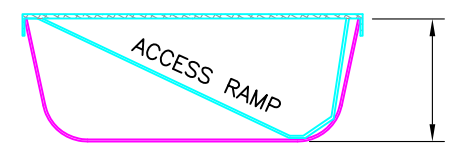

SECTION A-A

STORAGE TANK

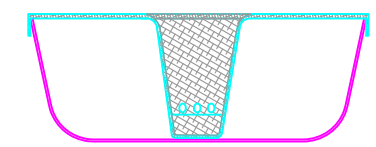

SECTION B-B

LID AND RAMP

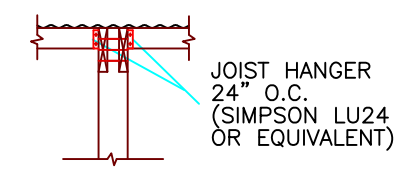

OPTIONAL CENTER POST CONNECTION

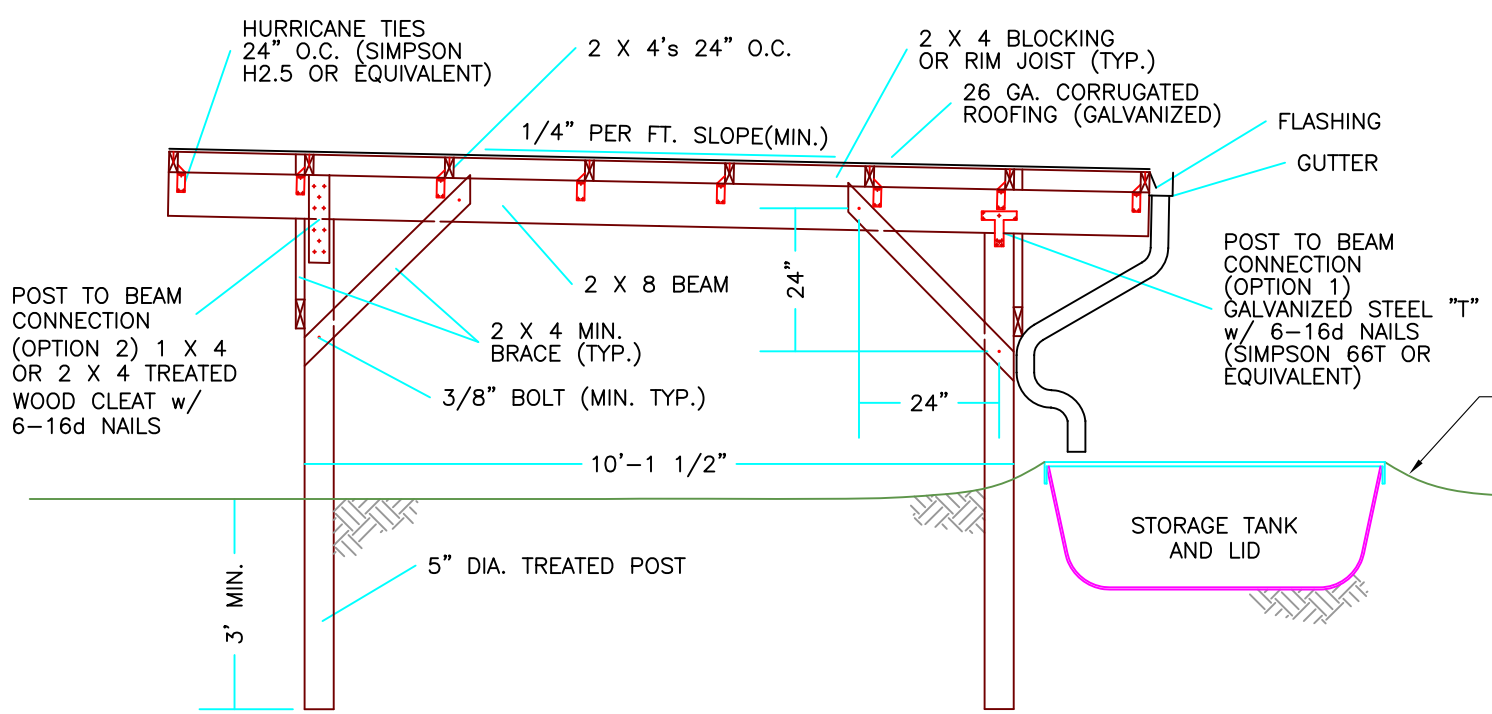

SIDE VIEW

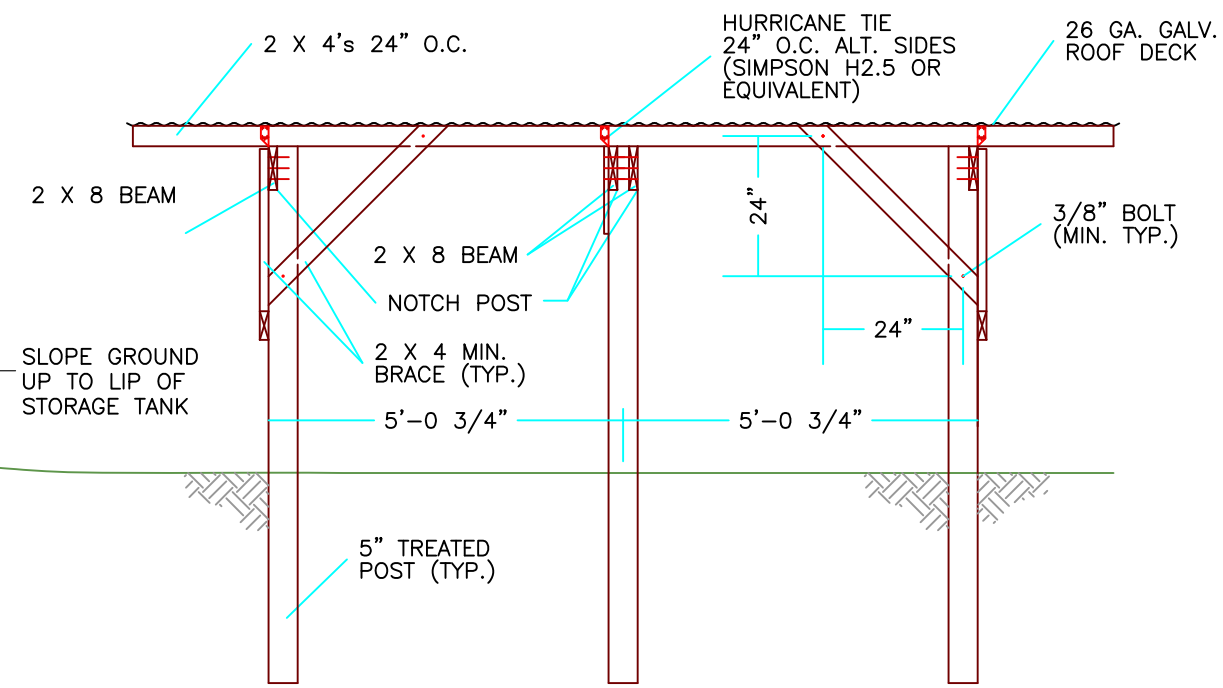

END VIEW

DESIGNED		DATE	
DRAWN	R M PETRICK	DATE	10/27/2010
CHECKED		DATE	
APPROVED		DATE	

WYOMING STANDARD DRAWING

WILDLIFE GUZZLER

TYPE E

NRCS Natural Resources Conservation Service United States Department of Agriculture

File Name

Drawing Number

636-5

SHEET 5 of 5