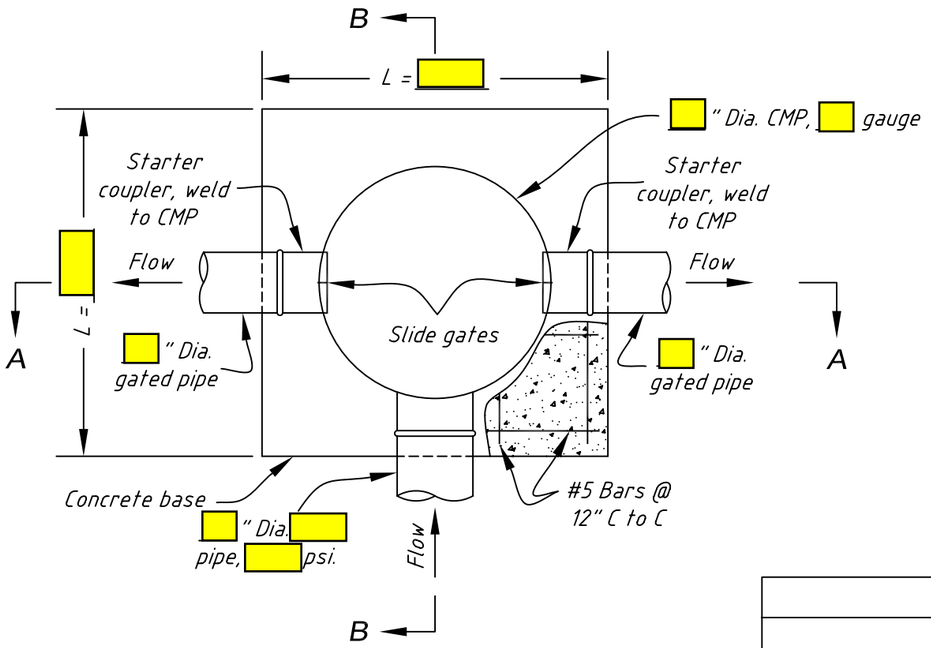

PLAN VIEW

CMP Riser Dia. (in.)	L	Concrete Volume (c.y.)	Total Length of Reinforcing Bars
36	4'-0"	0.5	65'-4"
42	4'-6"	0.6	72'-4"
48	5'-0"	0.8	79'-4"

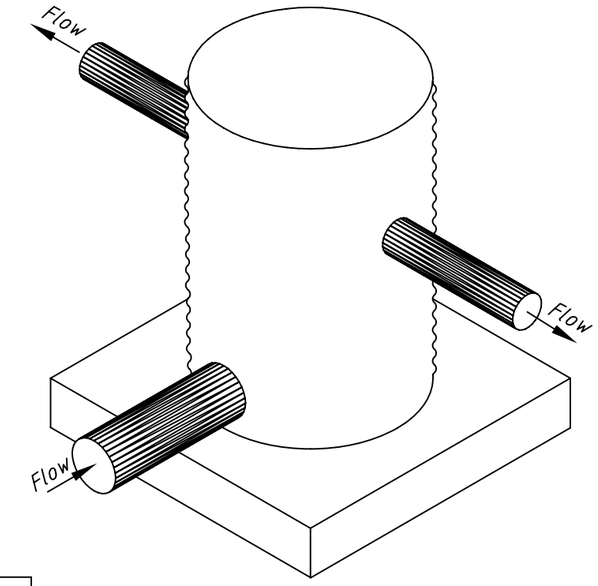

Note: Water control gates not shown

ISOMETRIC

TABLE OF QUANTITIES

ITEM	UNIT	QUANTITY
Concrete Base	C.Y.	
" Dia. CMP Riser, gauge	FT.	
Slide Gates, Model or equivalent	EA.	2
Reinforcement - #5 Bars	FT.	

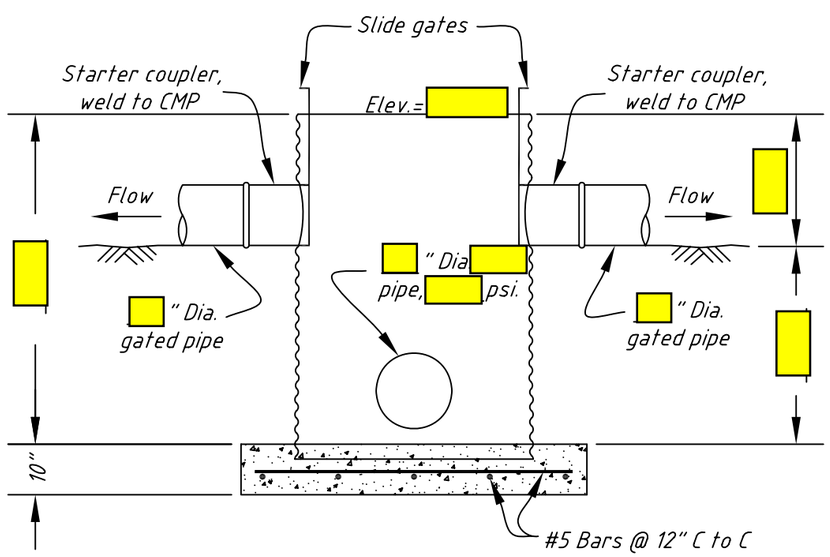

SECTION A-A

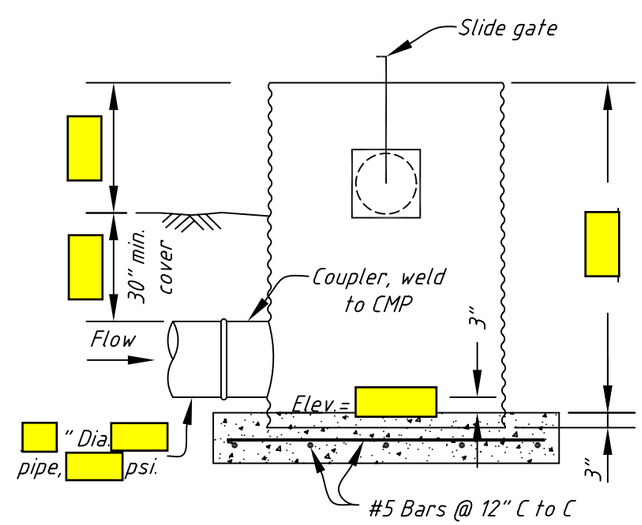

SECTION B-B

NOTES:

1. Concrete shall be Class 4000.
2. Minimum cover around reinforcing steel in concrete base is 3".

(Not to Scale)

Date

Designed

Drawn

Checked

Approved

Cooperator:

CMP Water Control Structure

County, Wyoming

County Conservation District

USDA NRCS

Natural Resources Conservation Service

File No.

Drawing No. 587-09

Sheet of