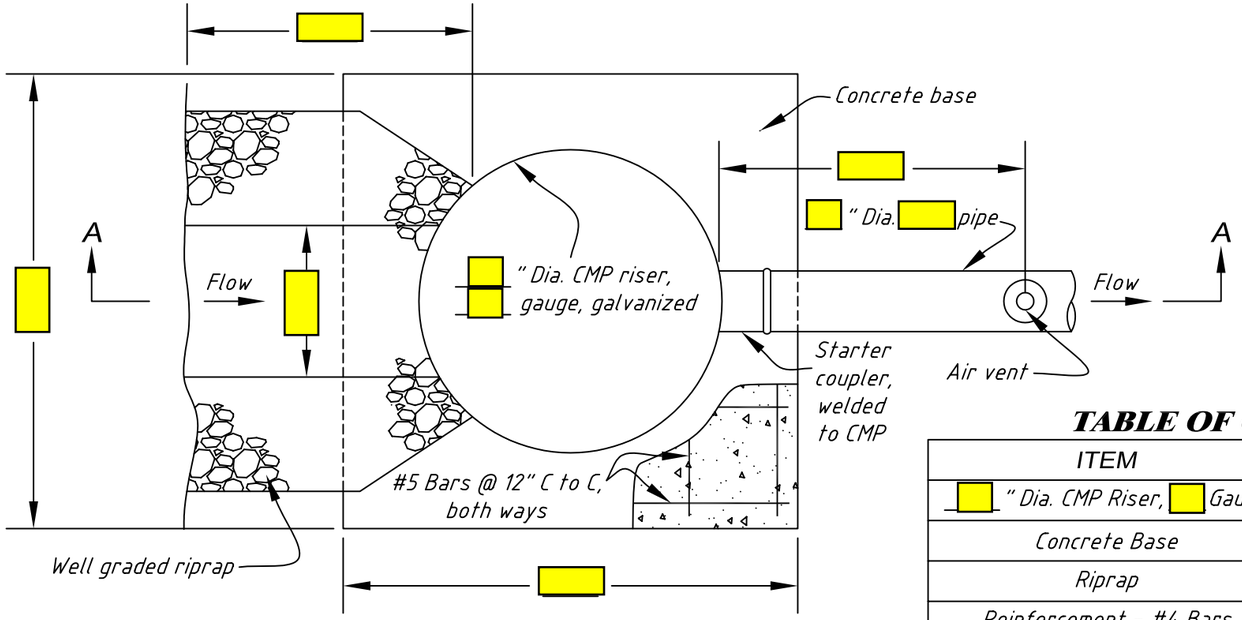

PLAN VIEW

TABLE OF QUANTITIES

ITEM	UNIT	QUANTITY
" Dia. CMP Riser, Gauge	L.F.	
Concrete Base	C.Y.	
Riprap	C.Y.	
Reinforcement - #4 Bars	L.F.	
Trash Rack - #3 Bars	L.F.	

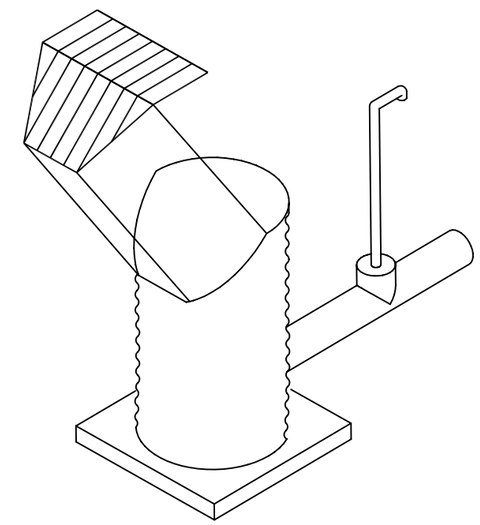

TYPICAL ISOMETRIC (Sta.)

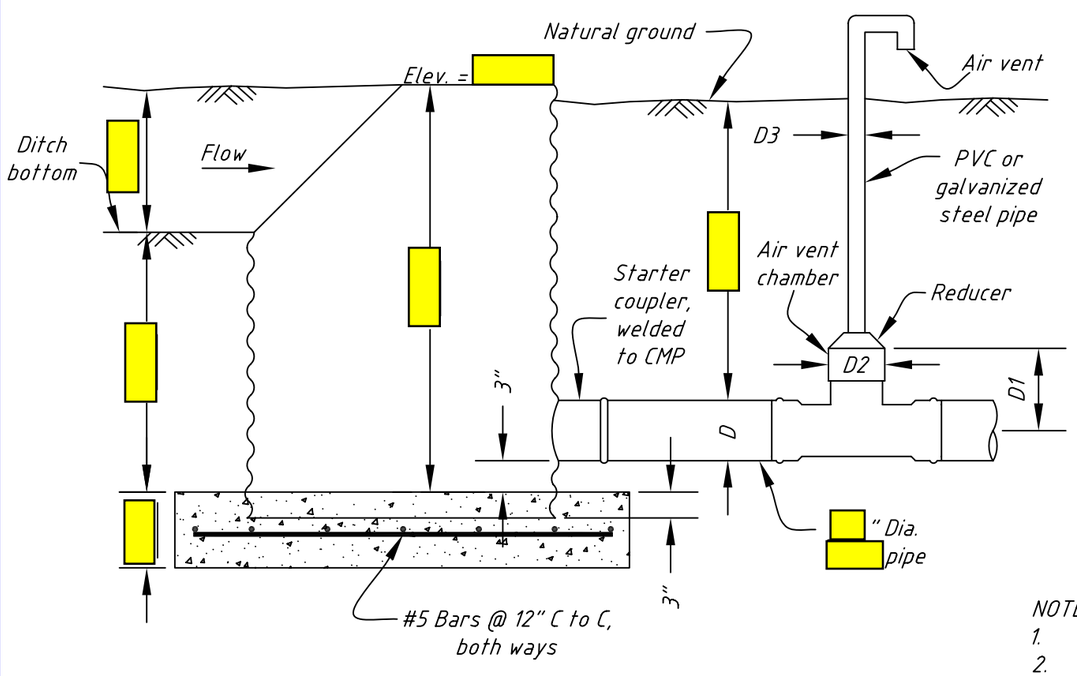

SECTIONAL ELEVATION A-A

Air Vent Chamber

Pipe Dia. "D" (inches)	D1 Min. (inches)	D2 Min. (inches)	D3 Min. (inches)
6	6	4.5	2
8	8	6.0	2
10	10	7.0	2
12	12	8.5	2
15	15	11.0	3

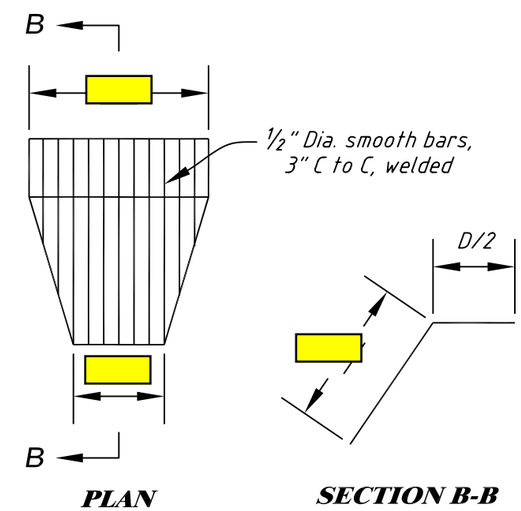

PLAN

SECTION B-B

TRASH RACK DETAILS

NOTES:

1. All metal not galvanized shall be painted
2. Minimum cover around reinforcing steel in concrete base is 3".

Date

Designed

Drawn

Checked

Approved

Cooperator:

CMP Inlet Structure

County, Wyoming

County Conservation District

USDA NRCS

Natural Resources Conservation Service

File No.

Drawing No. 587-06

Sheet of