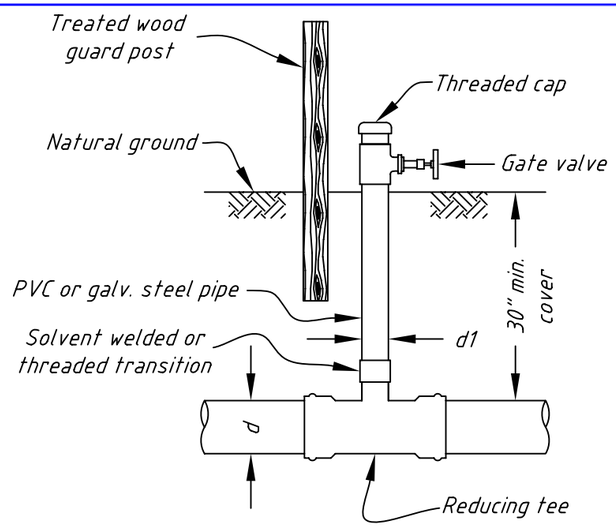

PUMP OUT RISER
(Type "A")

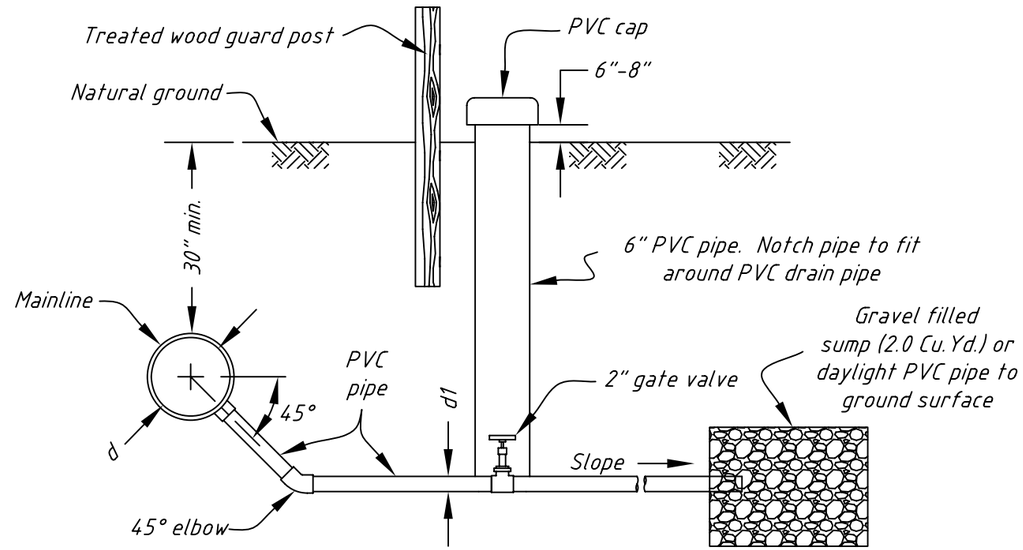

SUMP DRAIN ASSEMBLY
(Type "B")

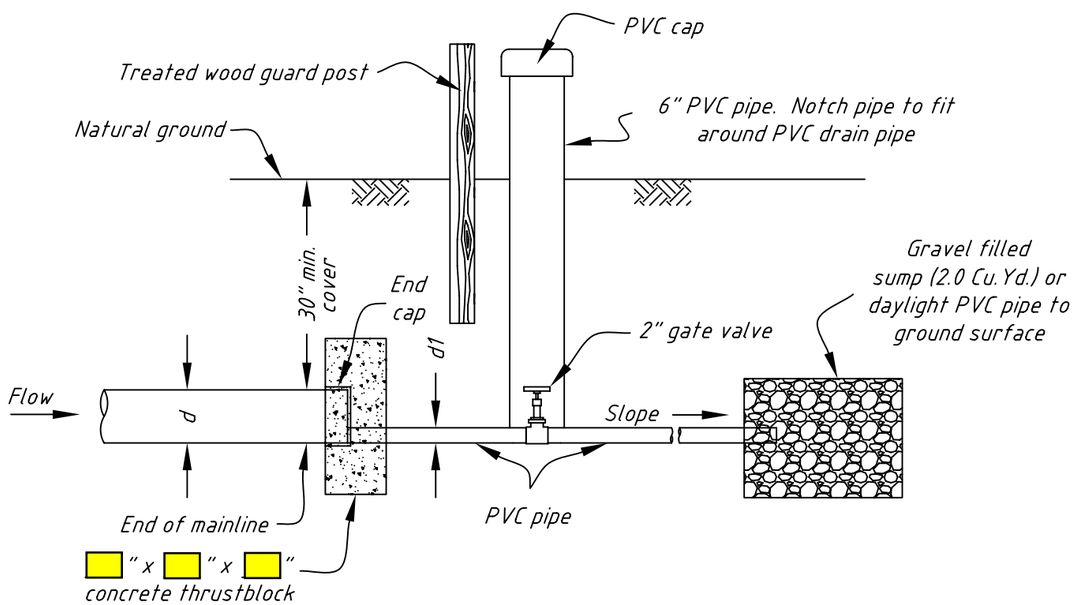

END OF MAINLINE SUMP DRAIN ASSEMBLY
(Type "C")

DRAIN TYPE/LOCATIONS @ ALL LOW POINTS IN MAINLINE

STATION	DRAIN TYPE	d (inches)	d1 (inches)

Note:
Sump type drain shall NOT be used in silt or clay soils of low permeability. Use pump out or daylight drain.

Date
Designed
Drawn
Checked
Approved

Cooperator:
Sprinkler System Drain Details
County Conservation District
County, Wyoming

USDA NRCS
Natural Resources Conservation Service

File No.
Drawing No. 430-04
Sheet of