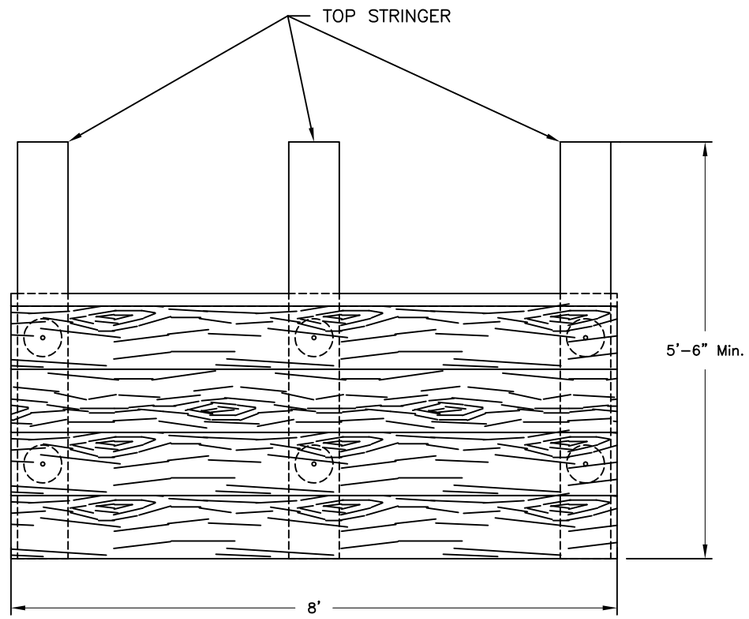

TOP VIEW

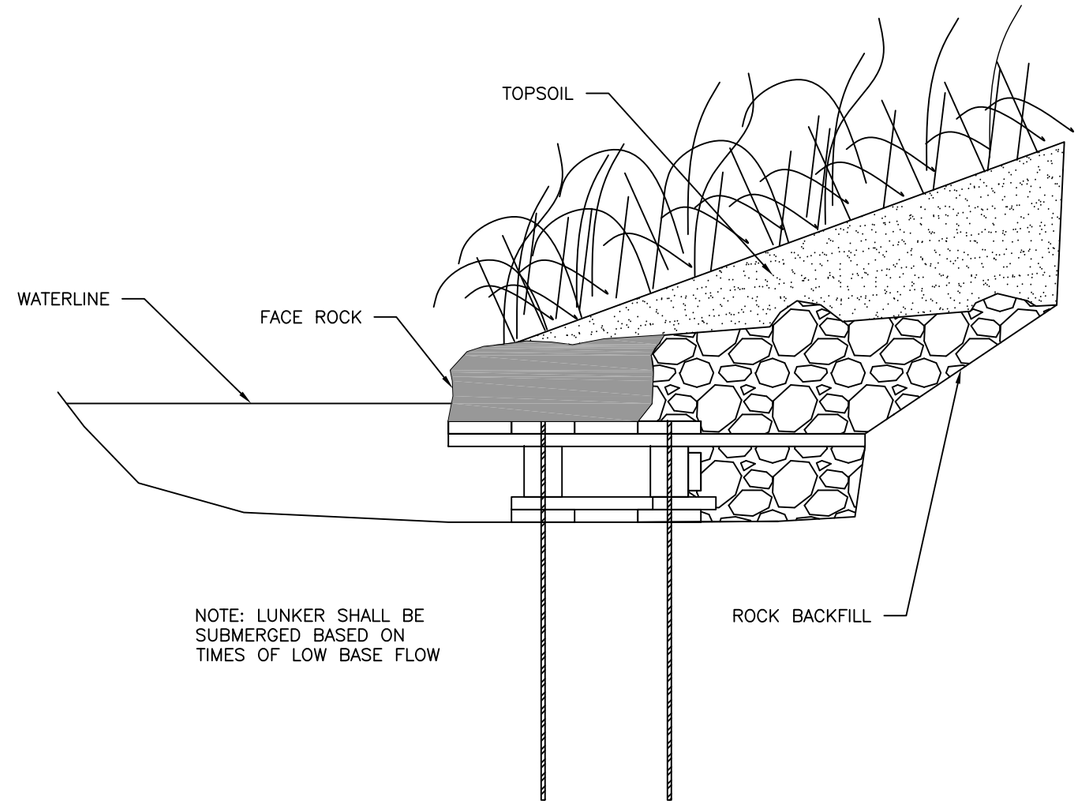

CONSTRUCTED SIDE VIEW

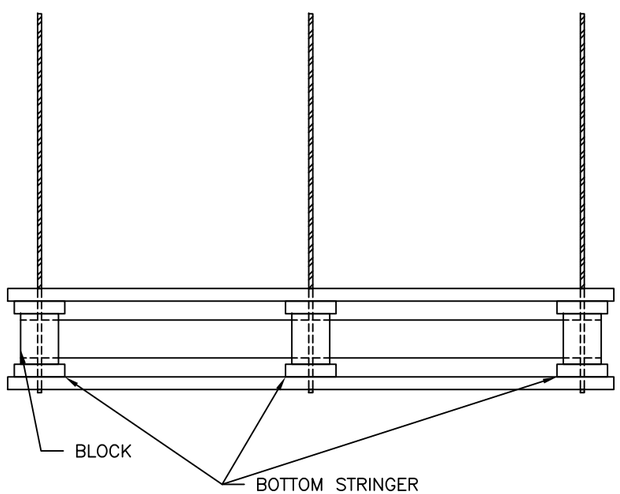

FRONT VIEW

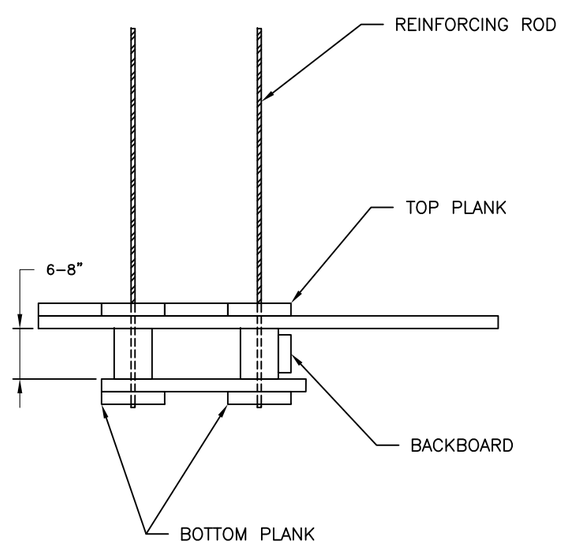

SIDE VIEW

BILL OF MATERIALS LUNKER STRUCTURE		
ITEM	SIZE	QUANTITY
TOP PLANK	2" X 8" X 8' OAK BOARD	4
TOP STRINGER	2" X 8" X 5'-6" Min OAK BOARD	3
BLOCK	6" DIA. X 8" OAK BLOCK	6
BOTTOM STRINGER	2" X 8" X 30" BOARD	3
BOTTOM PLANK	2" X 8" X 8' OAK BOARD	2
BACKBOARD	2" X 8" X 8' OAK BOARD	1
#5 REINFORCING ROD	5/8" X 5' DEFORMED STEEL	6
RINGSHANK NAILS	20D GALVANIZED	60

10 Total Boards 2" X 8" X 8 Feet Long

Date

Designed

Drawn

Checked

Approved

LUNKER STRUCTURE DETAIL

CLIENT:

COUNTY:

United States Department of Agriculture

Natural Resources Conservation Service

File Name
WI-930

Date
08/14

Sheet of