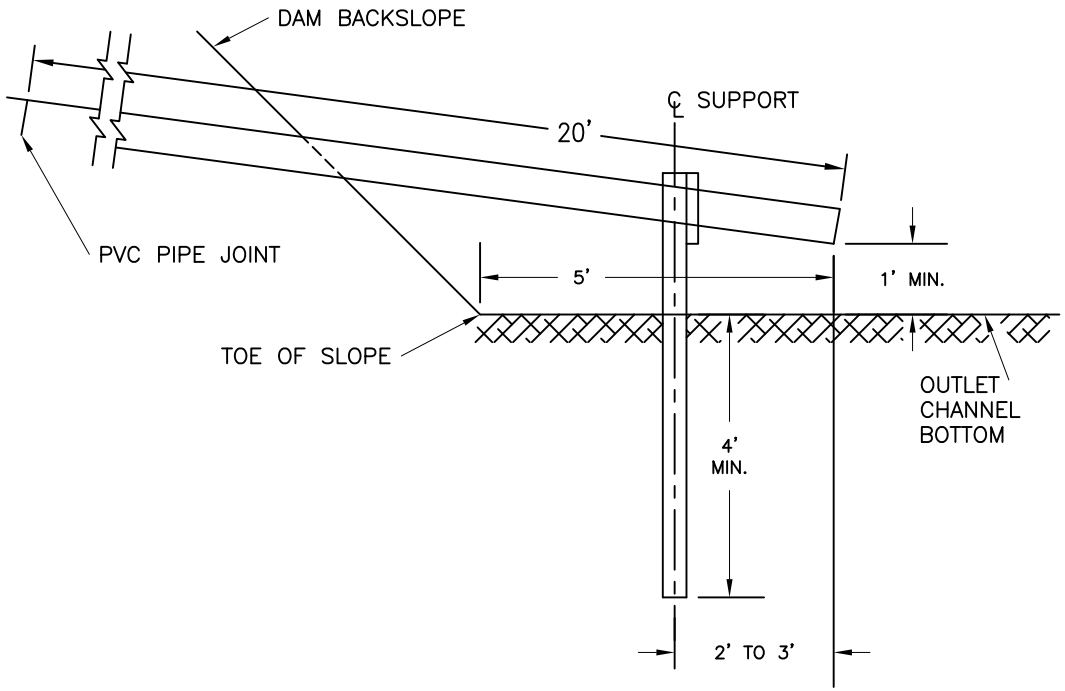

SECTION

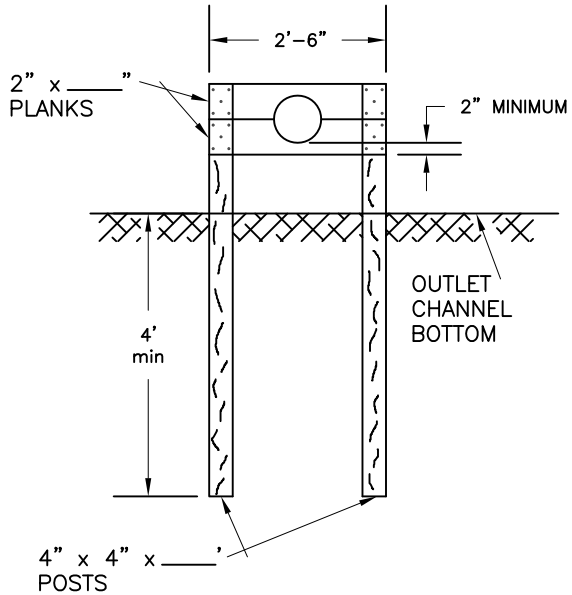

ELEVATION

BILL OF MATERIALS	
ITEM	QUANTITY
16d RING SHANK NAILS	20
PRESSURE TREATED LUMBER	
POSTS – 4" x 4" x ____'	2
PLANKS – 2" x ____" x 30"	2

THIS STANDARDIZED DESIGN MUST BE ADAPTED TO THE SPECIFIC SITE.

CONSTRUCTION NOTES:

1. OUTLET SECTION OF PIPE MUST BE A CONTINUOUS 20' SECTION.
2. ALL LUMBER WILL CONFORM TO WISCONSIN CONSTRUCTION SPECIFICATION 14.
3. CUT THE PLANKS TO FIT THE OUTSIDE DIAMETER OF THE PIPE.

File Name WI-201
Date 07/14
Sheet of

Designed ____ Date
Drawn ____
Checked ____
Approved ____

WOOD POST PIPE SUPPORT FOR 4" TO 12" PVC PIPE

CLIENT: ____
COUNTY: ____

United States Department of Agriculture
Natural Resources Conservation Service