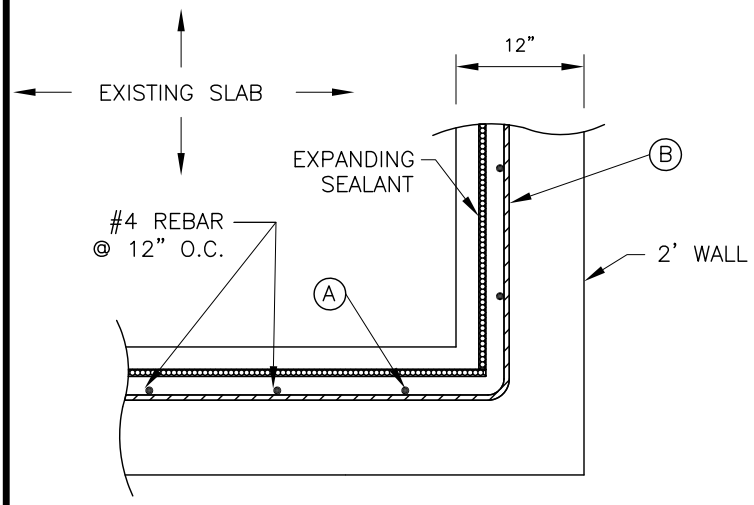

PLAN VIEW

CONDITIONS OF USE

- BACKFILL = NONE
- NO MANURE STACKING OR PONDING OF WATER
- ONLY LIGHT SCRAPING ALLOWED

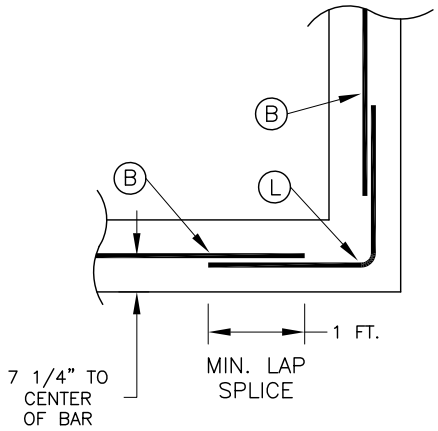

CORNER DETAIL (PLAN VIEW)

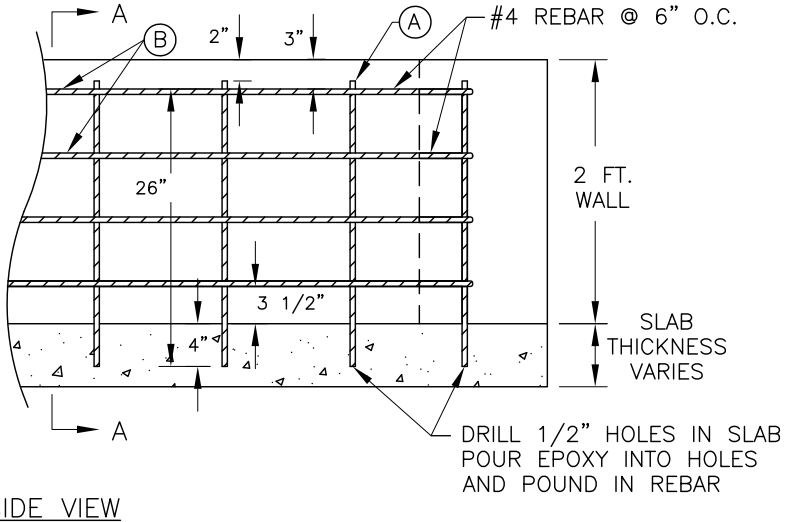

SIDE VIEW

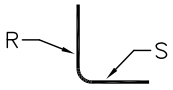

TYPE 2 BAR

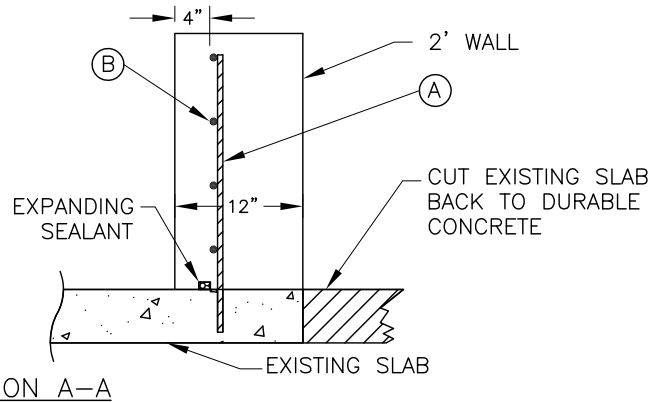

SECTION A–A

NOTES:

1. DIMENSIONS ARE TO THE REINFORCING BAR SURFACE UNLESS OTHERWISE NOTED.
2. THE EXISTING SLAB SURFACE MUST BE THOROUGHLY CLEANED WITH WATER. THE SURFACE OF EXISTING SLAB SHALL BE KEPT MOIST FOR AT LEAST 1 HOUR PRIOR TO PLACEMENT OF NEW CONCRETE.
3. GRADE 40 OR 60 BARS ARE PERMITTED.
4. STEEL QUANTITY DOES NOT INCLUDE SPLICE LENGTHS.

LINEAL FT. OF WALL– _____FT.

STEEL SCHEDULE

MARK	SIZE	QUAN	TYPE	R	S	LENGTH	TOTAL LENGTH
A	4		STR	---	---	2'–2"	
B	4		STR	---	---		
L	4		2	2'–0"	2'–0"	4'–0"	
						#4 BARS, TOTAL LENGTH	

QUANTITIES	
CONCRETE (W.C.S.* 4) .0741 CU. YDS. PER LIN. FT.	CU. YD.
#4 REBAR 6.167 FT. PER LIN. FT.	FT.

*WI. CONSTRUCTION SPECIFICATION

USDA United States Department of Agriculture
Natural Resources Conservation Service

2 FT. WALL ON EXISTING SLAB

CLIENT: _____

COUNTY: _____

	Date
Designed	
Drawn	
Checked	
Approved	

File Name WI–924

Date 08/14

Sheet of