NOT TO SCALE

NOTE: SHORE THE WALLS ON THE INSIDE, AT THE TOP, UNTIL THE SLATS AND BUILDING FLOOR ARE IN PLACE.

LID DESIGN LOADING (CIRCLE ONE)

I LIVESTOCK
II SKID–STEER LOADER
III TRACTOR

CONDITIONS OF USE

CONCRETE 4000 psi
BACKFILL TO TOP
SURCHARGE (Y or N)
SOIL EFP = 60

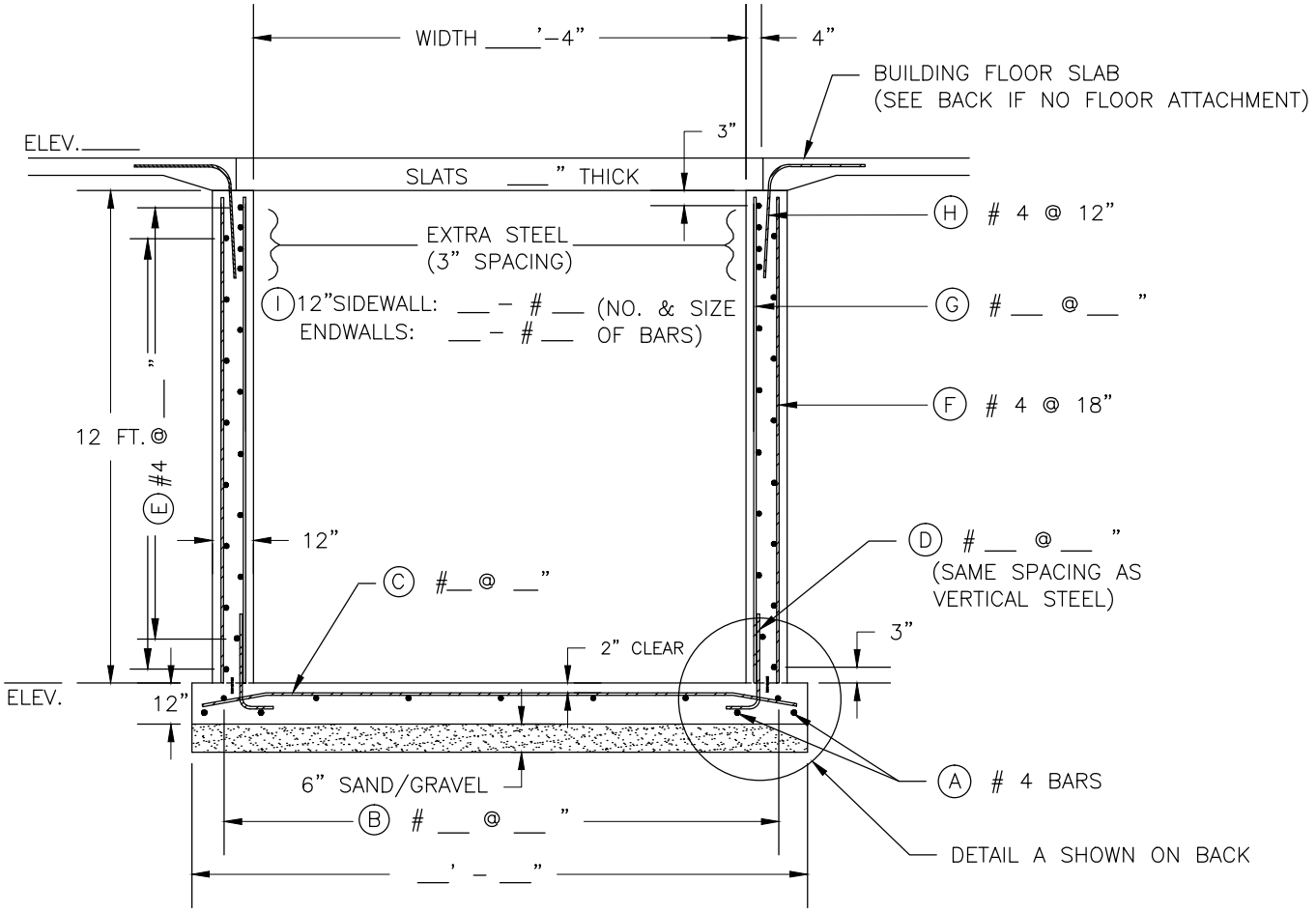

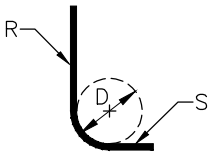

TYPE 21 BAR

STEEL SCHEDULE (GRADE 40 OR 60) (CIRCLE ONE)

MARK	SIZE	TYPE	R	S	LENGTH
A	4	STR	––	––	
B		STR	––	––	
C		STR	––	––	
D		21			
E	4	STR	––	––	
F	4	STR	––	––	
G		STR	––	––	
H	4	21	2'–0"	2'–0"	4'–0"
I		STR	––	––	

NOTE: VERTICAL WALL STEEL AND ENDS OF REINFORCEMENT REQUIRE 2" CLEAR COVER.

SEE WI–745 FOR CORNER STEEL DETAIL.

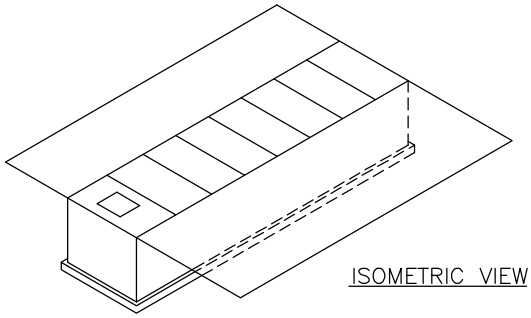

ISOMETRIC VIEW

United States Department of Agriculture
Natural Resources Conservation Service

SLATS ACROSS TOP OF TANK
IN INTERIOR OF BUILDING
12 FOOT WALL

CLIENT: _____
COUNTY: _____

Date
Designed _____
Drawn _____
Checked _____
Approved _____

File Name WI–743E
Date 08/14
Sheet of

NOT TO SCALE

STEEL DETAILS		
BAR SIZE	BEND DIAMETER (D) INCHES	SPLICE LENGTH INCHES (MIN.)
#3	2–1/4	12
#4 – HORIZ. WALL	3	19
#4 – ALL OTHER	3	15
#5 – HORIZ. WALL	3–3/4	24
#5 – ALL OTHER	3–3/4	19
#6 – HORIZ. WALL	4–1/2	29
#6 – ALL OTHER	4–1/2	22
#7 – HORIZ. WALL	5–1/4	42
#8 – HORIZ WALL	6	48

NOTE: HORIZONTAL STEEL IN WALLS REQUIRES A LONGER SPLICE THAN HORIZONTAL STEEL WITH 12" OR LESS OF FRESH CONCRETE CAST BELOW THE SPLICE.

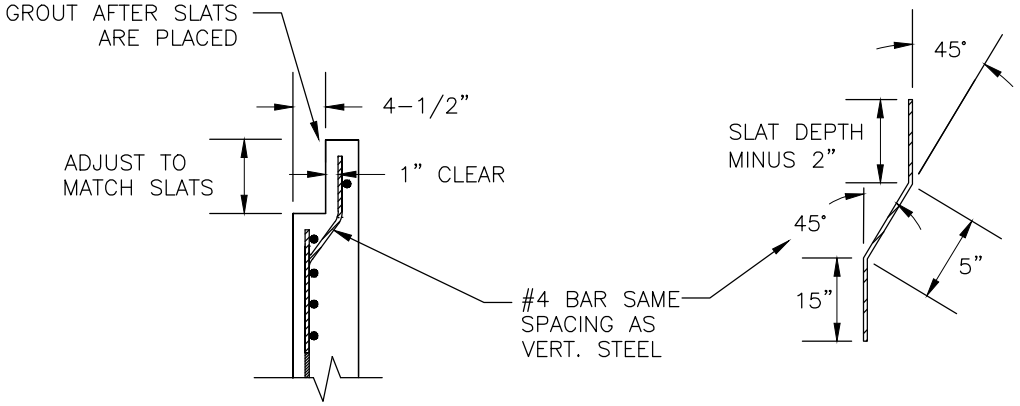

CONFIGURATION OF WALL IF THERE IS NO BUILDING FLOOR ATTACHED

DETAIL A

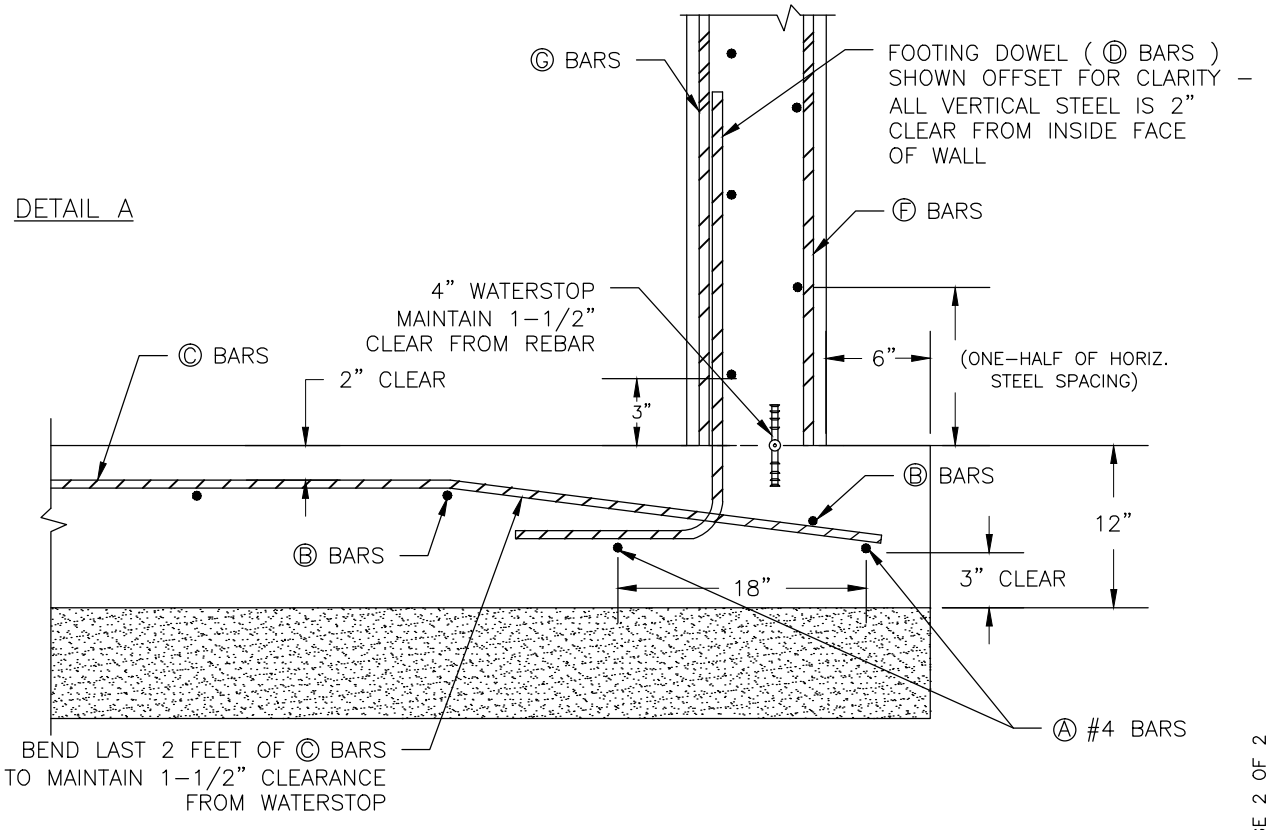

THIS STANDARDIZED DESIGN MUST BE ADAPTED TO THE SPECIFIC SITE.
THIS DRAWING WAS PREPARED AT THE NRCS STATE OFFICE,
8030 EXCELSIOR DRIVE, SUITE 200 MADISON, WI 53717–2906