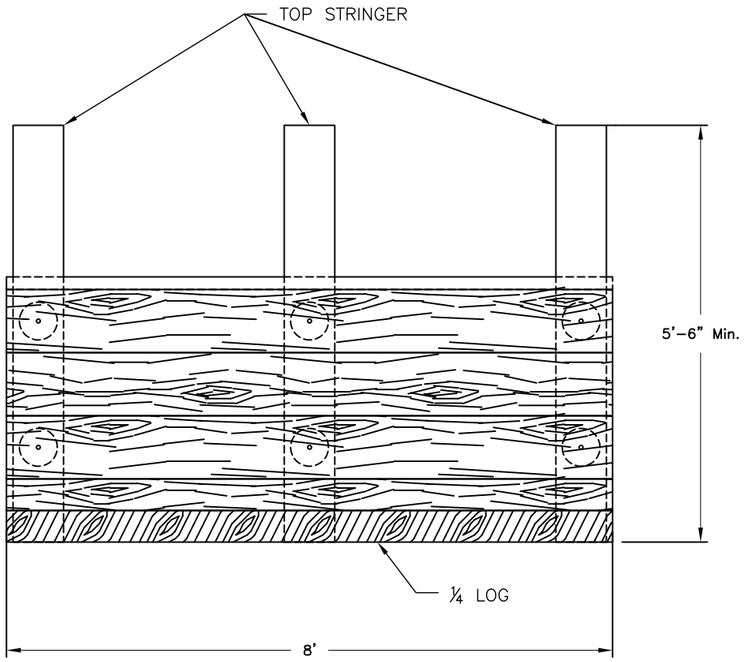

TOP VIEW

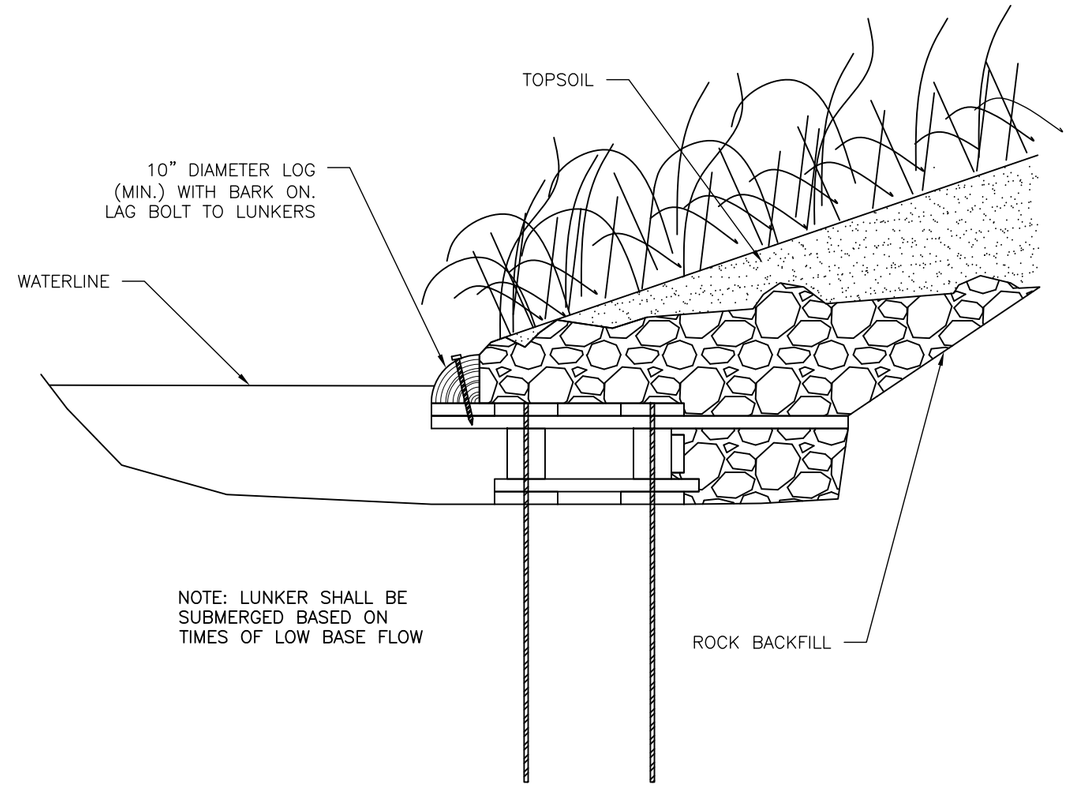

CONSTRUCTED SIDE VIEW

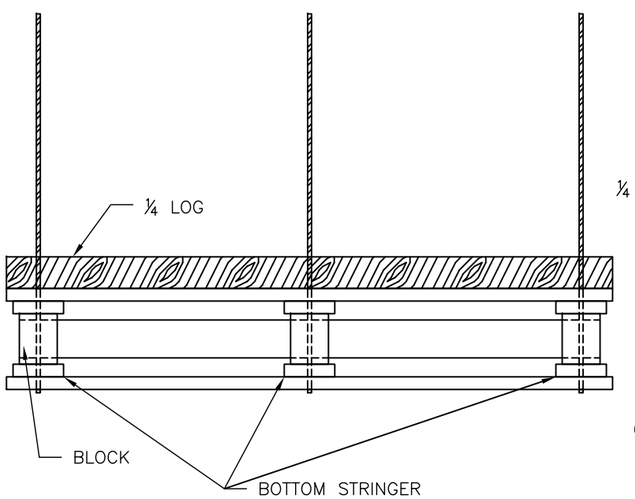

FRONT VIEW

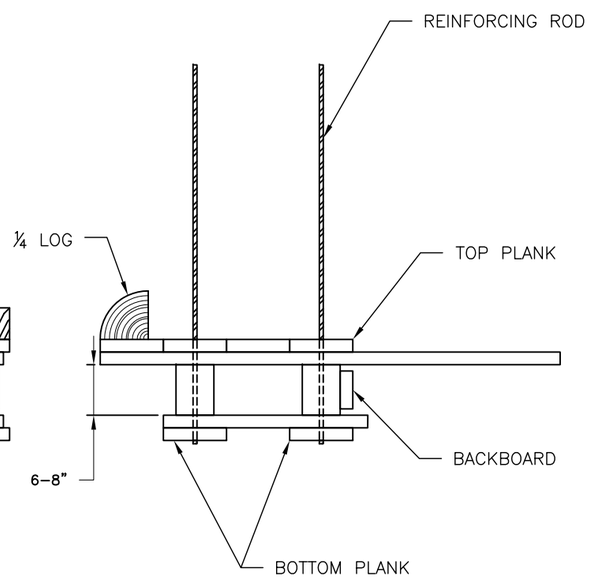

SIDE VIEW

BILL OF MATERIALS
LUNKER STRUCTURE

ITEM	SIZE	QUANTITY
TOP PLANK	2" X 8" X 8' OAK BOARD	4
TOP STRINGER	2" X 8" X 5'–6" Min OAK BOARD	3
BLOCK	6" DIA. X 8" OAK BLOCK	6
BOTTOM STRINGER	2" X 8" X 30" BOARD	3
BOTTOM PLANK	2" X 8" X 8' OAK BOARD	2
BACKBOARD	2" X 8" X 8' OAK BOARD	1
#5 REINFORCING ROD	$\frac{5}{8}$" X 5' DEFORMED STEEL	6
RINGSHANK NAILS	20D GALVANIZED	60
LAG BOLTS	$\frac{3}{8}$" X 8" GALVANIZED	4
$\frac{1}{4}$ LOG	8–9 FEET LONG	1

10 Total Boards 2" X 8" X 8 Feet Long

Date

Designed

Drawn

Checked

Approved

LUNKER STRUCTURE DETAIL WITH 1/4 LOG

CLIENT:

COUNTY:

United States Department of Agriculture

Natural Resources Conservation Service

File Name
WI–930A

Date
08/14

Sheet of