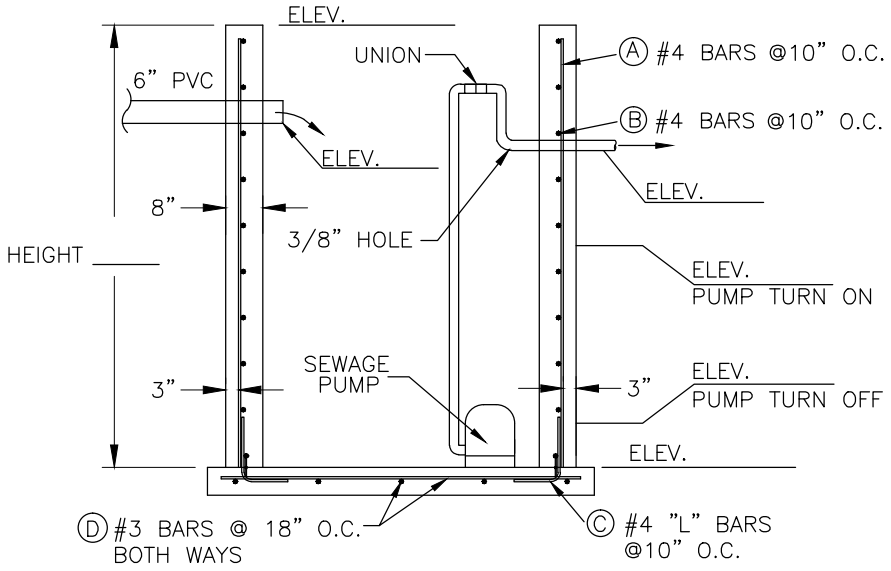

TYPICAL SECTION

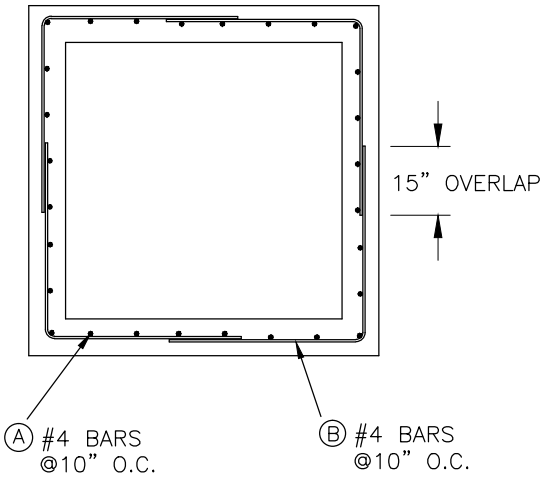

PLAN VIEW OF WALL

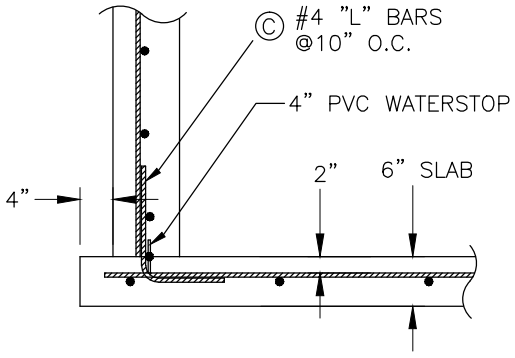

BOTTOM CORNER DETAIL

ACCEPTABLE PITS	
MAX. SIZE	MAX. DEPTH
6' x 6'	8'

PIT DIMENSIONS

_____' x _____' x _____' DEEP

WI–911A Page 1 of 2

United States Department of Agriculture
Natural Resources Conservation Service

CONCRETE PUMPING BASIN

CLIENT: _____

COUNTY: _____

	Date
Designed	
Drawn	
Checked	
Approved	

File Name: WI–911A

Date: 08/14

Sheet of

STEEL SCHEDULE							
MARK	SIZE	AM'T	TYPE	R	S	LENGTH	TOTAL LENGTH
A	#4		STR	—	—		
B	#4		2				
C	#4		2	14"	10"	2'–0"	
D	#3		STR	—	—		

TYPE 2

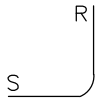

QUANTITIES	
CONCRETE	CU. YDS.
CRUSHED STONE	CU. YDS.
6" PVC (SCH.40 OR SDR 35)	LIN. FT.
2" STYROFOAM INSULATION	SQ. FT.
PUMP _____ GPM @ _____ FT.	EACH
PIPE FROM PUMP – _____" DIA.	LIN. FT.
LID	EACH
CAULKING	AS NEEDED

NOTES:
1. PLACE CONCRETE ACCORDING TO WI. SPEC. 4.
2. ALL PVC PIPES MUST MEET WI. STANDARD AND SPEC. 634.
3. PLACE 6" OF CRUSHED STONE BELOW THE BASIN. CLEAN, PIT RUN SAND–GRAVEL (LESS THAN 10% FINES) MAY ALSO BE USED AS A SUBSTITUTE.
4. THE BASIN OPENING MUST HAVE A COVER.
5. PLACE RIGID STYROFOAM INSULATION, 4 FEET WIDE, OVER THE PIPE WHEREVER THERE IS LESS THAN 3' OF COVER. 2.5–INCHES OF STYROFOAM REPLACES APPROXIMATELY ONE FOOT OF SOIL.
6. CAULK OR GROUT AT PIPE OPENINGS TO ENSURE LIQUID TIGHTNESS.
7. THE BASIN IS A CONFINED SPACE. FOLLOW ASAE EP470, MANURE STORAGE SAFETY, FOR ANY PLANNED ENTRY.
8. DESIGN VALUES: INTERNAL LOAD – 60 PCF; STEEL – 40,000 PSI; CONCRETE = 3,500 PSI