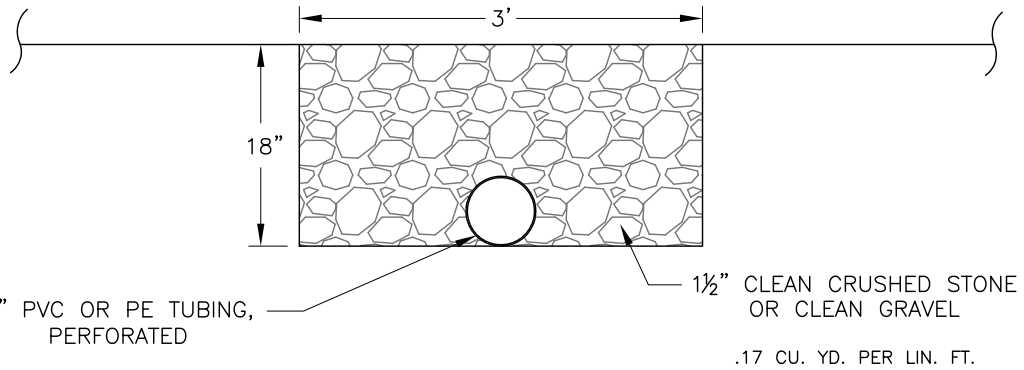

OPTION A

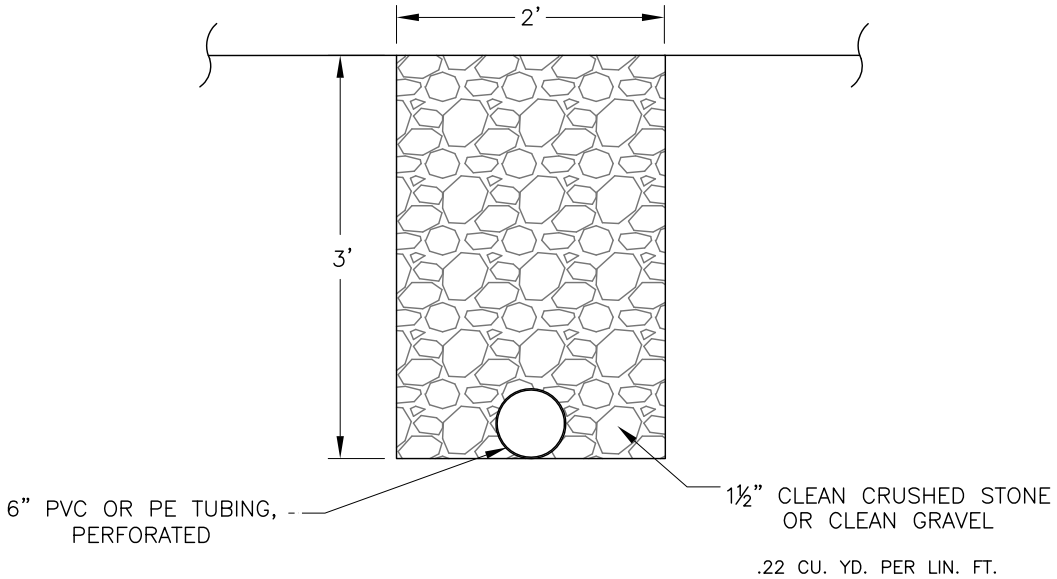

OPTION B

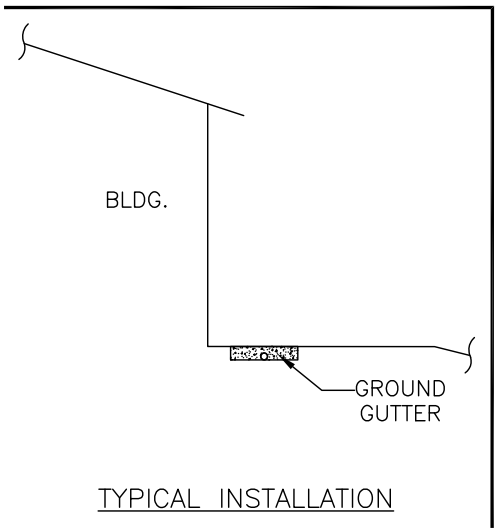

TYPICAL INSTALLATION

NOTES:
1. ALL PIPE SHALL MEET WISCONSIN CONSTRUCTION SPECIFICATION 15 OR 44.
2. PLACE CENTER OF TRENCH BELOW ROOF DRIP LINE.
3. SIZE PIPE FOR ANY ADDITIONAL SURFACE WATER NOT EXCLUDED FROM THE TRENCH.
4. CONSIDER FILTER CLOTH OR PLASTIC AS A WEED/SOIL BARRIER AT THE BOTTOM OF THE TRENCH.

QUANTITIES*	
1½" CLEAN CRUSHED STONE OR GRAVEL	CU. YD.
6" PVC OR PE TUBING, PERFORATED	LIN. FT.

* ESTIMATED TO THE NEAT LINES AND GRADES

USDA United States Department of Agriculture Natural Resources Conservation Service	GROUND GUTTER CLIENT: COUNTY:	Date Designed Drawn Checked Approved	Drawing Name WI-408C Date 07/14 Sheet of