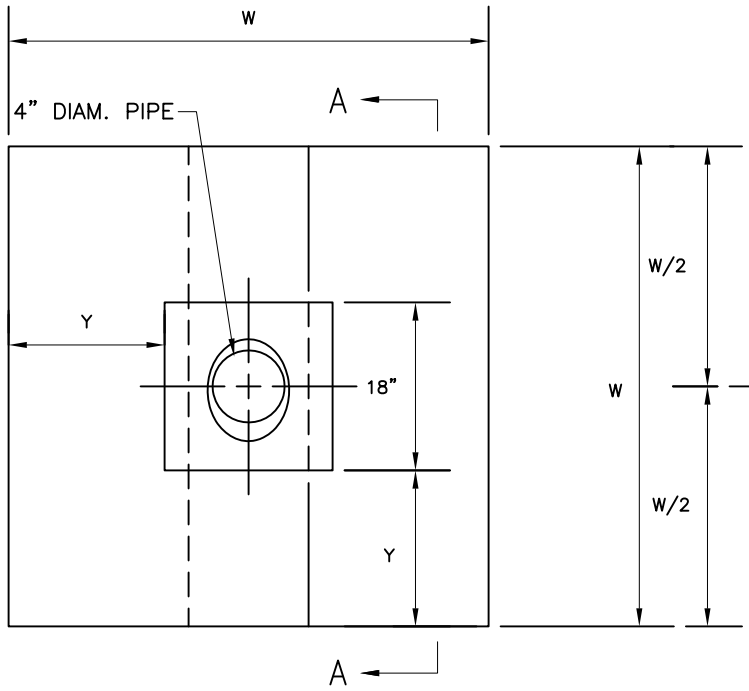

12" OVERLAP FOR 5' x 5' SIZE

ELEVATION

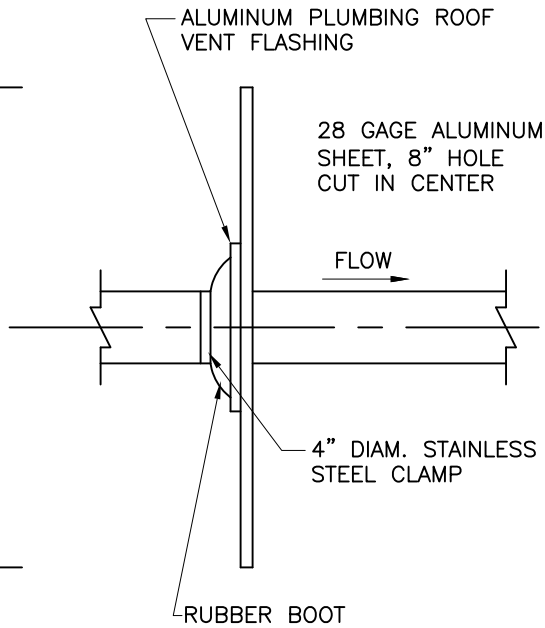

SECTION A–A

TABLE OF QUANTITIES (PER COLLAR)

"Y" INCHES	"W" FEET	ALUMINUM SHEET SQ. FT.	STAINLESS STEEL CLAMP	RIVETS
6	2.5	6.3	1	16
21	5.0	30.0	1	46

NUMBER OF ANTISEEP COLLARS REQUIRED = _____

NOTES:

1. FOR THE 5' x 5' COLLAR, TWO 3' x 5' ALUMINUM SHEETS ARE NEEDED. OVERLAP THEM 12". APPLY A BEAD OF CAULK TO THE OVERLAP EDGES BEFORE THE SHEETS ARE RIVETED TOGETHER. SPACE THE RIVETS NO FURTHER THAN 4 INCHES APART AND 1 INCH FROM THE OVERLAP EDGE. RIVET BOTH OVERLAP EDGES.
2. FOR THE 2.5' x 2.5' COLLAR, ONLY ONE ALUMINUM SHEET IS NEEDED.
3. CENTER THE FLASHING ON THE SHEET AND CUT AN 8 INCH DIAMETER HOLE (CENTERED).
4. APPLY A BEAD OF CAULK TO THE RIVETING AREA. RIVET THE FLASHING TO THE COLLAR. RIVETS INSTALLED ON THE FLASHING SHALL BE 1 INCH IN FROM THE EDGE AND SPACED 4 INCHES APART.
5. ALL RIVETS SHALL BE 1/8" ALUMINUM RIVETS.
6. FORCE THE COLLAR OVER THE UPSTREAM END OF THE PIPE AND SLIDE THE COLLAR INTO POSITION.
7. INSTALL THE STAINLESS STEEL CLAMP OVER THE RUBBER LIP ON TO THE PIPE.
8. THE COMPLETED INSTALLATION MUST BE WATERTIGHT.

USDA United States Department of Agriculture Natural Resources Conservation Service	ALUMINUM ANTISEEP COLLAR FOR 4" DIAMETER SMOOTH WALL PIPE CLIENT: _____ COUNTY: _____	Date Designed _____ Drawn _____ Checked _____ Approved _____	File Name WI–245 Date 07/14 Sheet of