SEE DRAWING 415A OR
415B FOR ORIFICE DETAILS

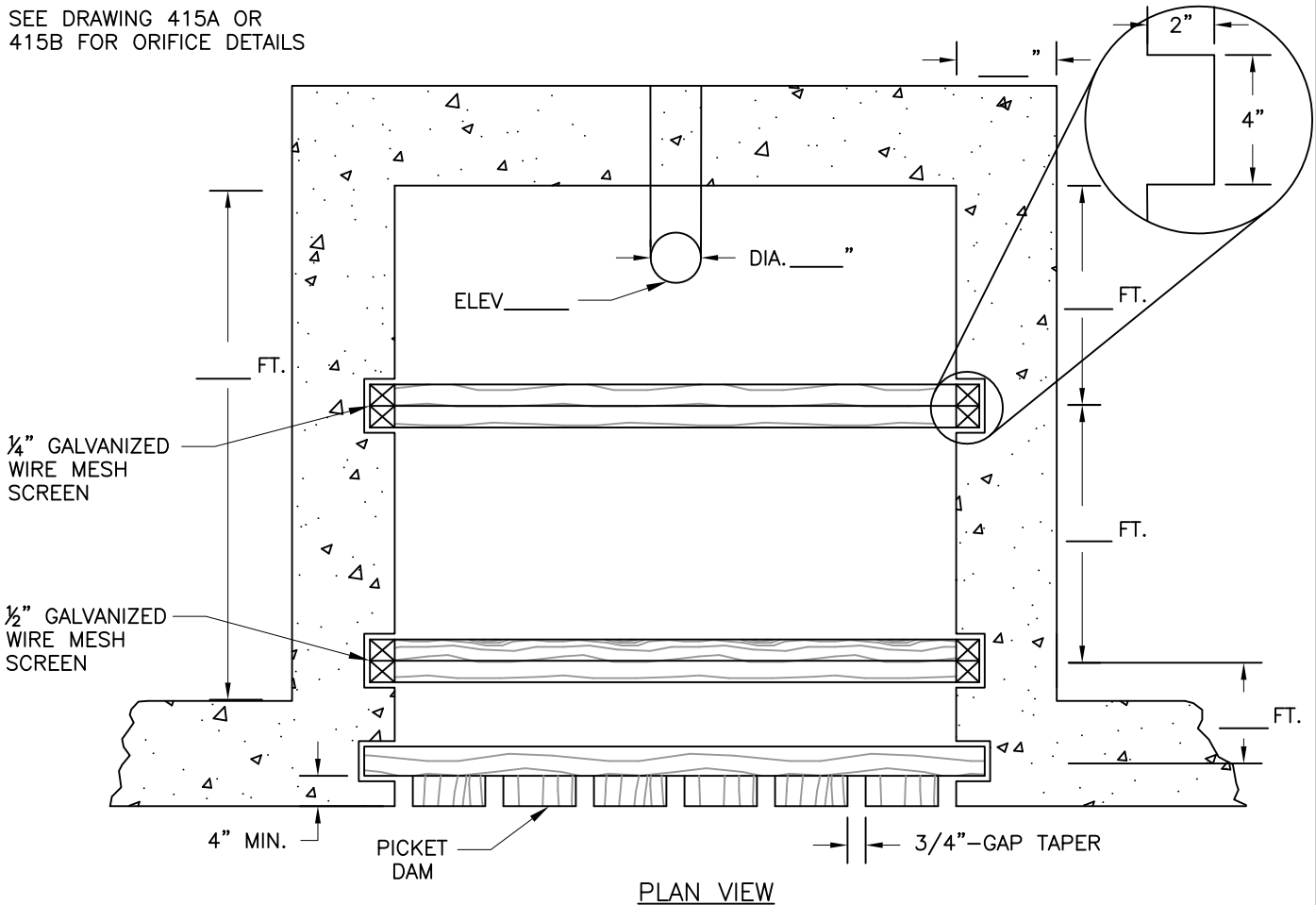

PLAN VIEW

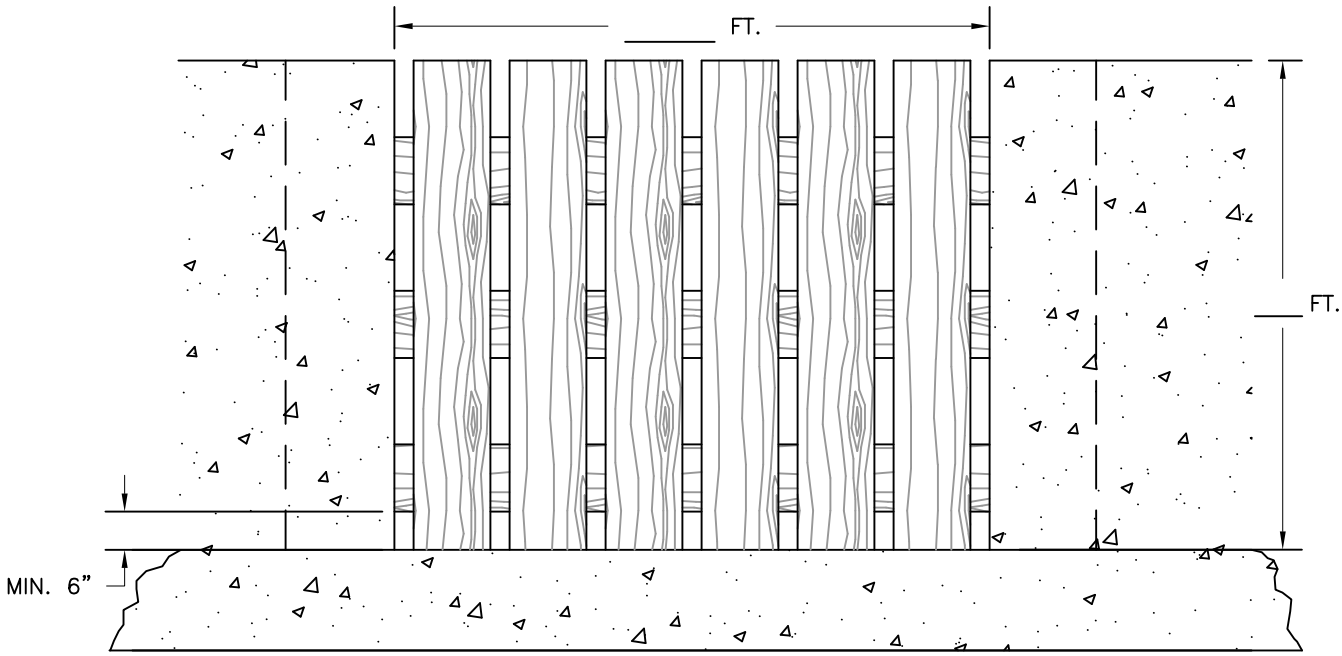

FRONT ELEVATION VIEW

USDA United States Department of Agriculture Natural Resources Conservation Service	SEDIMENT BASIN OUTLET BOX CLIENT: COUNTY:	Date Designed Drawn Checked Approved	File Name WI–416A Date 07/14 Sheet of