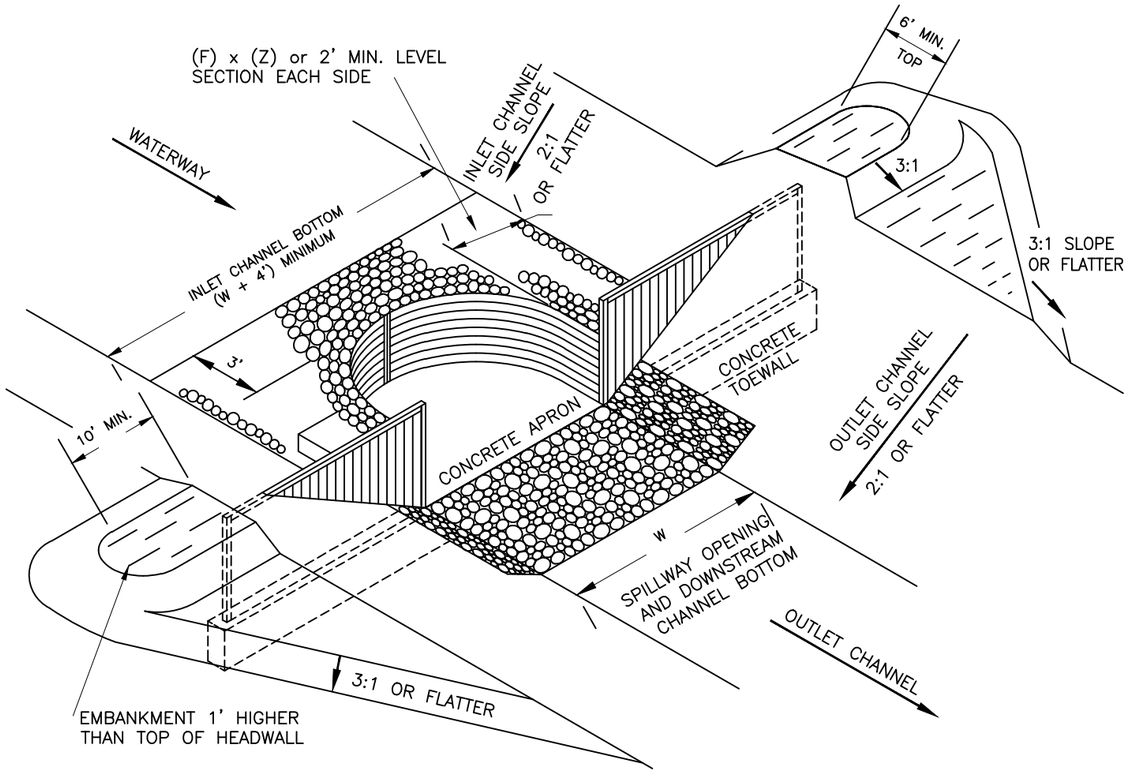

ISOMETRIC VIEW

MATERIAL NOTES:

1. GALVANIZED STEEL SHEET SHALL BE STRUCTURAL PLATE (1/2" x 2-1/2" CORRUGATIONS), WEIR SHALL BE 12 GA., HEADWALL SHALL BE 14 GA.
2. APPLY ASPHALTIC MASTIC BETWEEN STEEL SHEETS BEFORE WELDING TOGETHER. ASPHALT MASTIC SHALL BE SIMILAR IN TYPE AND EQUAL IN QUALITY TO TRUMBULL 5X ASPHALT MASTIC, KNIFE OR TROWEL GRADE, AS MANUFACTURED BY THE TRUMBULL ASPHALT COMPANY.
3. FILTER DRAIN SHALL CONSIST OF SAND , GRAVEL, OR CONCRETE AGGREGATE MIXTURE WITH 50 TO 80% PASSING A NO. 4 (1/4") SIEVE, MAXIMUM SIZE OF 3" AND NOT MORE THAN 5% PASSING A NO. 200 SIEVE.
4. RIPRAP SHALL CONSIST OF WELL-GRADED ROCK, MAXIMUM SIZE OF 8". MINIMUM SIZE OF 4".
5. BOLTS SHALL BE 3/4" DIAMETER AND GALVANIZED CONFORMING TO ASTM A 307.

CONSTRUCTION NOTES:

1. EXCAVATE FOR CONCRETE APRON AND TOEWALL IN UNDISTURBED SOIL. SIDE SLOPES ABOVE THE TOP OF CONCRETE SHALL BE 1:1 OR FLATTER
2. FORMS ARE NOT REQUIRED FOR CONCRETE APRON, CONCRETE TOEWALL, OR SPREAD FOOTINGS (WHEN REQUIRED) IF EXCAVATED SOIL WILL STAND VERTICALLY.
3. SET STEEL STRUCTURE TO GRADE AND PLACE REINFORCING BARS BEFORE POURING CONCRETE FOR APRON AND TOEWALL.
4. WELDING OF WEIR SEAM IS NOT REQUIRED WHEN OPTIONAL BOLTING IS USED.
5. PAINT ALL DAMAGED AND WELDED AREAS WITH 2 COATS OF DUST-ZINC OXIDE PAINT.
6. MINIMUM REINFORCING STEEL COVER 2" FROM TOP AND 3" FROM BOTTOM OF CONCRETE APRON.
7. PLACE FILTER DRAIN MATERIAL. LAY TILE TO OUTLET STUB WHEN APPLICABLE.
8. BACKFILL AROUND STRUCTURE IN ACCORDANCE WITH WISCONSIN CONSTRUCTION SPECIFICATION 3.
9. PLACE RIPRAP.
10. COMPLETE SHAPING AND GRADING.
11. SEED ALL DISTURBED AREAS.

ESTIMATED QUANTITIES

STRUCTURE	_____	EACH
CONCRETE – WI CONST. SPEC. 4	_____	CU. YD.
REINFORCING BARS – WI CONST. SPEC. 4 #4 (1/2" DIA.) _____ FEET	_____	POUNDS
FILTER DRAIN (0.04L) – WI CONST. SPEC. 8	_____	CU. YD.
RIPRAP (1.10 + 0.12W + 0.09L) – WI CONST. SPEC. 9	_____	CU. YD.
DRAIN TILE OUTLET STUB – WI CONST. SPEC. 6	_____	EACH

WINGWALL AT WATERWAY STATION _____

ELEVATIONS		STRUCTURE DIMENSIONS	
TOP OF EMBANKMENT	_____	F	_____
EMERGENCY SPILLWAY	_____	H	_____
WEIR CREST	_____	W	_____
CONCRETE APRON	_____	B	_____
BENCH MARK		L	_____
DESCRIPTION _____		A	_____
_____		S	_____
_____			
_____			

WI-302 Page 1 of 3

Designed _____ Date _____
Drawn _____
Checked _____
Approved _____

FABRICATED CORRUGATED STEEL TOEWALL DROP SPILLWAY

OWNER: _____
COUNTY: _____

United States Department of Agriculture
Natural Resources Conservation Service

Drawing No. WI-302
Date 07/14
Sheet of

TILE OUTLET STUB–OPTIONAL

STEEL PIPE SHALL BE SHOP WELDED TO STRUCTURE FOR DRAIN TILE OUTLET WHEN SPECIFIED BELOW:

_____" DIA., 2 FT. STUB, REQUIRED AT

_____ O'CLOCK POSITION. BOTTOM INVERT

_____ FEET BELOW WEIR CREST

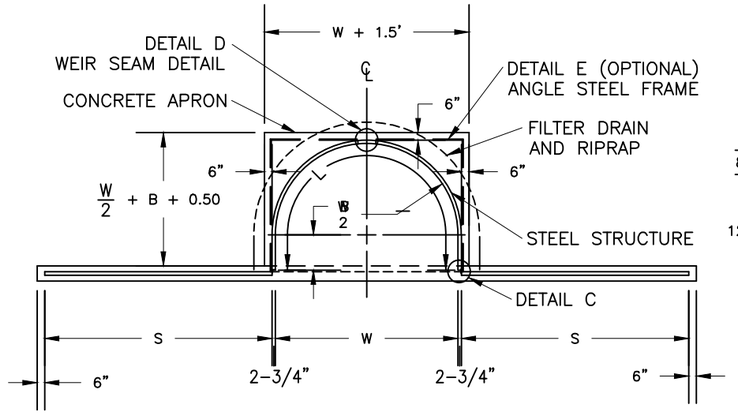

TOP VIEW

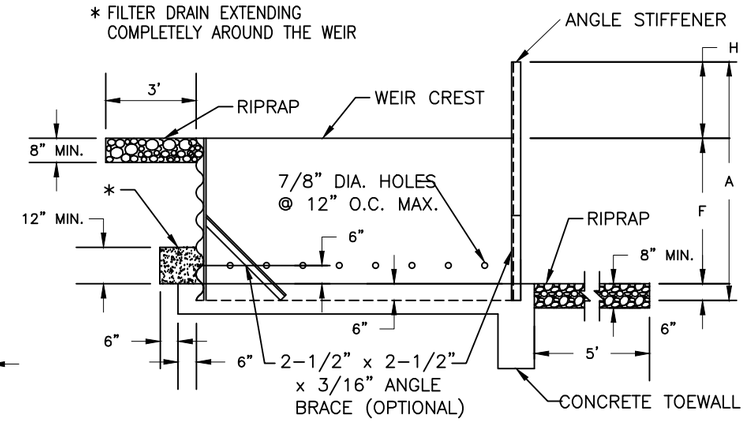

SECTION ON CENTERLINE

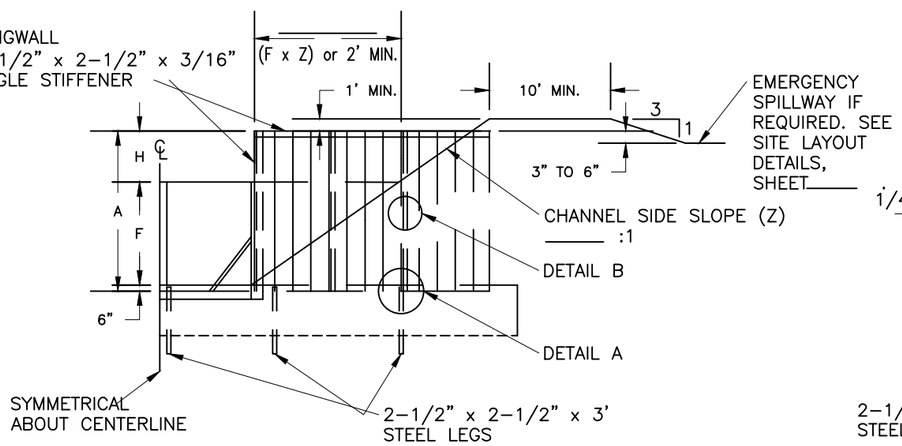

HALF VIEW
(LOOKING UPSTREAM)

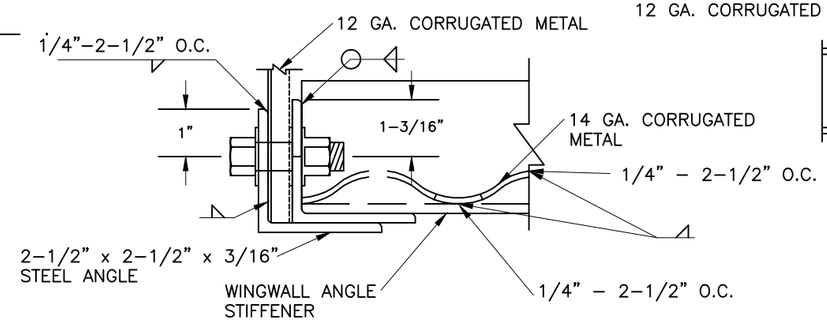

DETAIL C

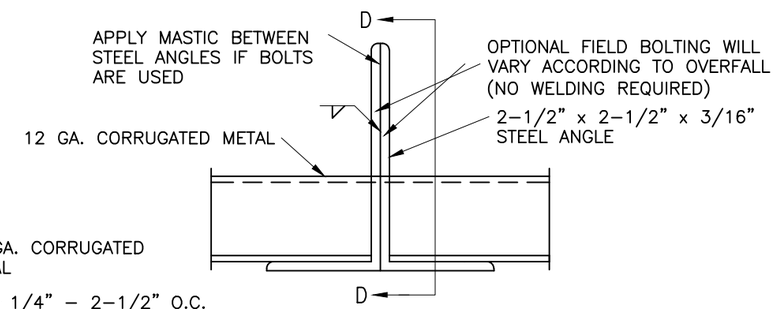

DETAIL D
(PLAN VIEW)

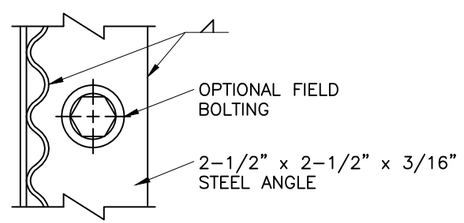

SECTION D–D

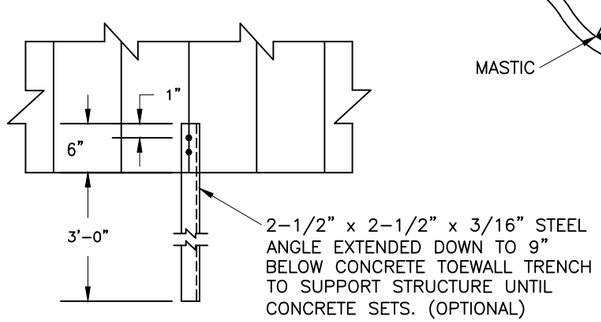

DETAIL A

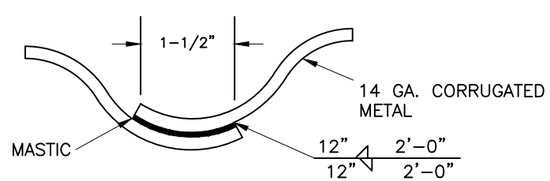

DETAIL B

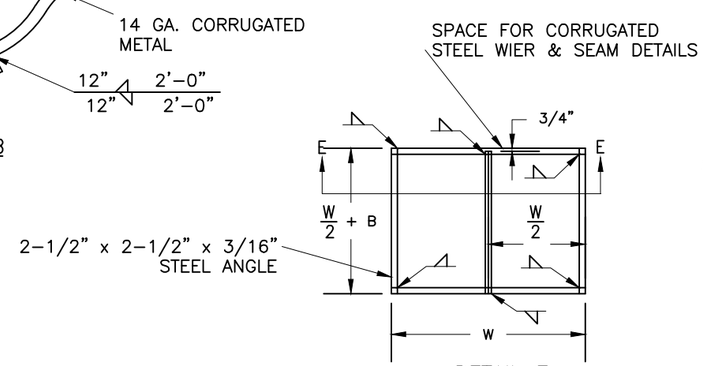

DETAIL E
(PLAN VIEW)

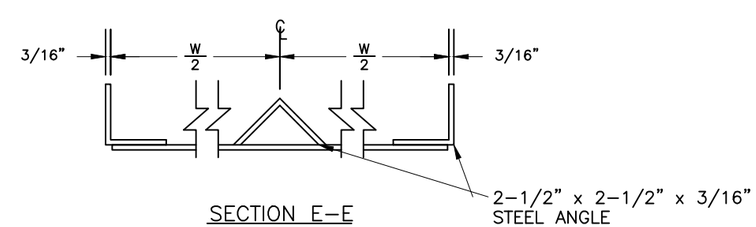

SECTION E–E

4 FOOT SPREAD FOOTING DETAIL

REQUIRED ON OVERFALLS OF 3 AND 4 FEET

USE THIS DETAIL WHEN $\frac{W}{2}$ + B + 0.50 < 8.0 FEET.

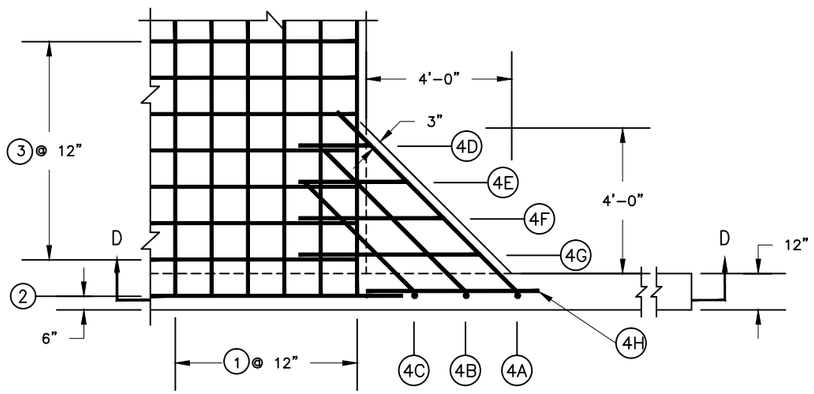

PLAN

STEEL SCHEDULE

MARK	QUAN	LENGTH	TYPE	B	C	TOTAL
1			21	1'–6"		
2	3		1	--	--	
3			1	--	--	
4A	2	8'–6"	21	1'–6"	7'–0"	17'–0"
4B	2	7'–0"	21	1'–6"	5'–6"	14'–0"
4C	2	5'–9"	21	1'–6"	4'–3"	11'–6"
4D	2	2'–0"	1	--	--	4'–0"
4E	2	3'–0"	1	--	--	6'–0"
4F	2	4'–0"	1	--	--	8'–0"
4G	2	5'–0"	1	--	--	10'–0"
4H	6	4'–9"	1	--	--	28'–6"
					TOTAL LIN. FT. =	99'–0"

MINIMUM SPLICE IS 16".
ALL REINFORCING BARS ARE NO. 4 BARS.
ALL REINFORCING BARS HAVE 12" SPACING

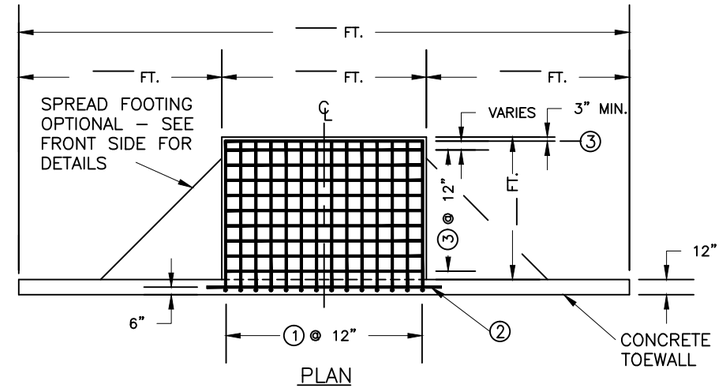

PLAN

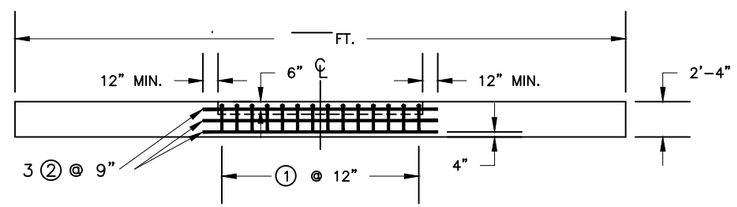

CONCRETE TOEWALL ELEVATION

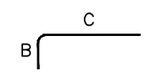

TYPE 21 BAR

TYPE 1 BAR – STRAIGHT

SPREAD FOOTING QUANTITIES *

CONCRETE _____ 0.5 CU. YD.
REINFORCING STEEL (99'–0") 66
POUNDS * INCLUDED IN ENGINEERING
FIELD HANDBOOK TABLES, CHAPTER 6.

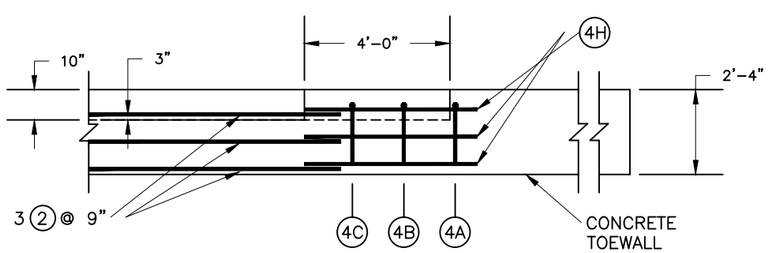

SECTION DD

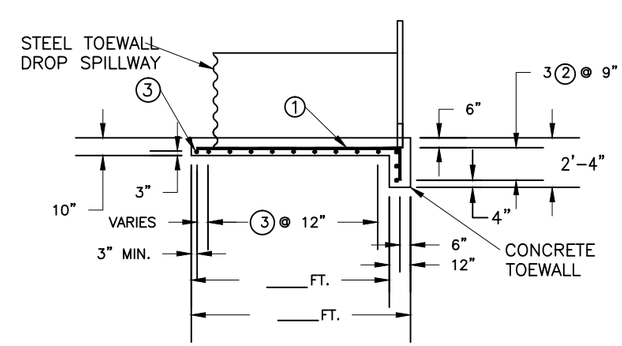

SECTION ON CENTERLINE

FORMULAS FOR DETERMINING BAR LENGTHS

MARK 1C LEG = $\frac{W}{2}$ + B + 0.75 FT.

MARK 2 = W + 3.5 FT. MIN.
MARK 3 = W + 1.0 FT.

8 FOOT SPREAD FOOTING DETAIL

REQUIRED ON OVERFALLS OF 3 AND 4 FEET

USE THIS DETAIL WHEN $\frac{W}{2}$ + B + 0.50 ≥ 8 FEET.

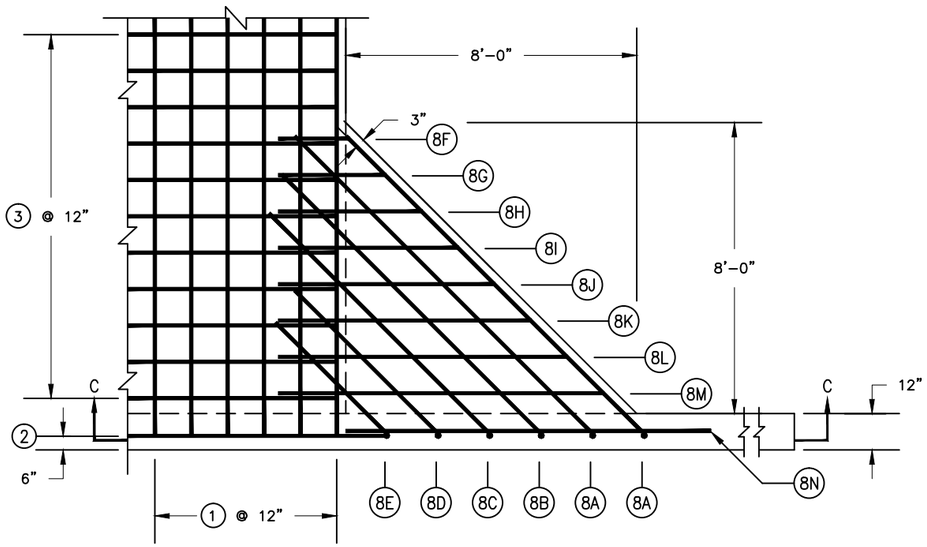

PLAN

REINFORCING STEEL DETAILS

STEEL SCHEDULE

MARK	QUAN	LENGTH	TYPE	B	C	TOTAL
1			21	1'-6"		
2	3		1	--	--	
3			1	--	--	
8A	4	13'-0"	21	1'-6"	11'-6"	52'-0"
8B	2	11'-6"	21	1'-6"	10'-0"	23'-0"
8C	2	10'-0"	21	1'-6"	8'-6"	20'-0"
8D	2	7'-0"	21	1'-6"	5'-6"	14'-0"
8E	2	5'-9"	21	1'-6"	4'-3"	11'-6"
8F	2	2'-0"	1	--	--	4'-0"
8G	2	3'-0"	1	--	--	6'-0"
8H	2	4'-0"	1	--	--	8'-0"
8I	2	5'-0"	1	--	--	10'-0"
8J	2	6'-0"	1	--	--	12'-0"
8K	2	7'-0"	1	--	--	14'-0"
8L	2	8'-0"	1	--	--	16'-0"
8M	2	9'-0"	1	--	--	18'-0"
8N	6	8'-9"	1	--	--	52'-6"
					TOTAL LIN. FT. =	261'-0"

MINIMUM LAP SPLICE = 16"
ALL REINFORCING BARS ARE #4 BARS.
ALL BARS @ 12" SPACING UNLESS OTHERWISE NOTED.

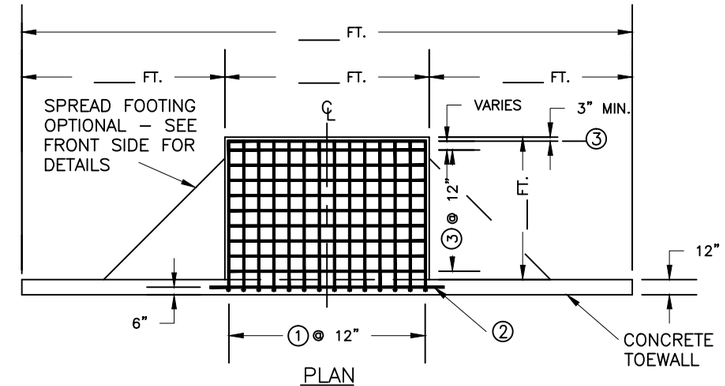

PLAN

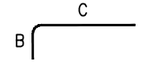

TYPE 21 BAR

TYPE 1 BAR – STRAIGHT

SPREAD FOOTING QUANTITIES *

CONCRETE ———————— 2.0 CU. YD.
REINFORCING STEEL (261'-0") 174 POUNDS
* INCLUDED IN ENGINEERING FIELD HANDBOOK TABLES, CHAPTER 6.

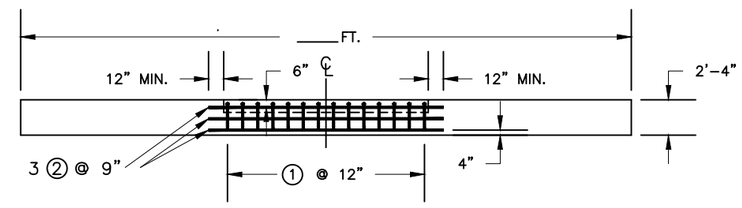

CONCRETE TOEWALL ELEVATION

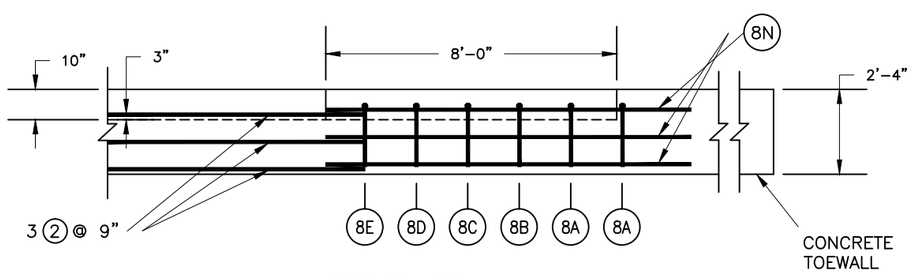

SECTION CC

FORMULAS FOR DETERMINING BAR LENGTHS

MARK 1C LEG = $\frac{W}{2}$ + B + 0.75 FT.
MARK 2 = W + 3.5 FT. MIN.
MARK 3 = W + 1.0 FT.

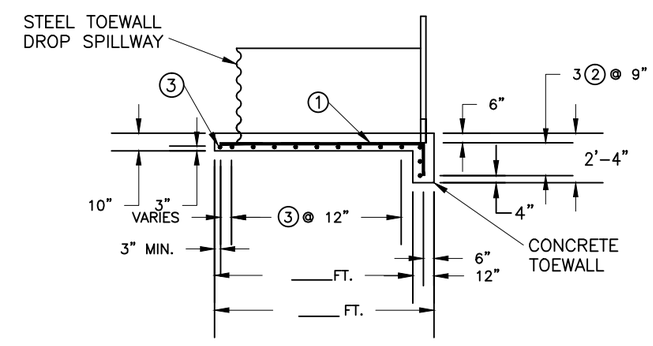

SECTION ON CENTERLINE