NOT TO SCALE

LID DESIGN LOADING (CIRCLE ONE)

I LIVESTOCK
II SKID–STEER LOADER
III TRACTOR

CONDITIONS OF USE

CONCRETE 4000 psi
BACKFILL TO TOP
SURCHARGE (Y or N)
SOIL EFP = 60

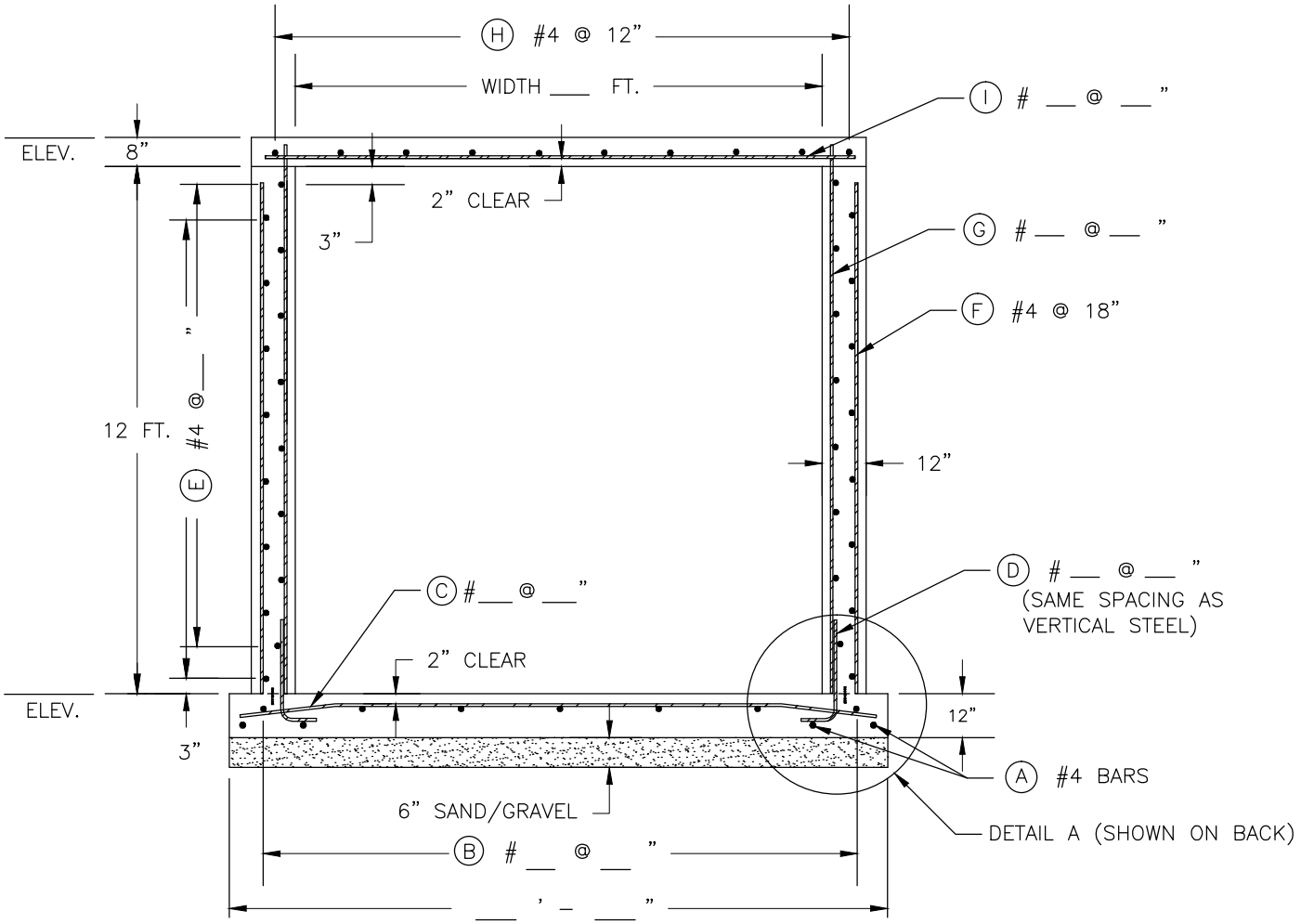

STEEL SCHEDULE (GRADE 40 OR 60) (CIRCLE ONE)

MARK	SIZE	TYPE	R	S	LENGTH
A	4	STR	--	--	
B		STR	--	--	
C		STR	--	--	
D		21			
E	4	STR	--	--	
F	4	STR	--	--	
G		STR	--	--	
H	4	STR	--	--	
I		STR	--	--	

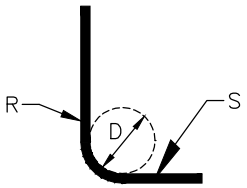

TYPE 21 BAR

NOTE: VERTICAL WALL STEEL AND ENDS OF REINFORCEMENT REQUIRE 2" CLEAR COVER

SEE WI–745 FOR CORNER STEEL DETAIL.

United States Department of Agriculture
Natural Resources Conservation Service

CAST IN PLACE LID
RECEPTION TANK
12–FOOT WALLS

CLIENT:
COUNTY:

Date
Designed
Drawn
Checked
Approved

File Name WI–742B
Date 08/14
Sheet of

NOT TO SCALE

STEEL DETAILS		
BAR SIZE	BEND DIAMETER (D) INCHES	SPLICE LENGTH INCHES (MIN.)
#3	2–1/4	12
#4 – HORIZ. WALL	3	19
#4 – ALL OTHER	3	15
#5	3–3/4	19
#6	4–1/2	22
#7	5–1/4	33
#8	6	37

NOTE: HORIZONTAL STEEL IN WALLS REQUIRES A LONGER SPLICE THAN HORIZONTAL STEEL WITH 12" OR LESS OF FRESH CONCRETE CAST BELOW THE SPLICE.

DETAIL A

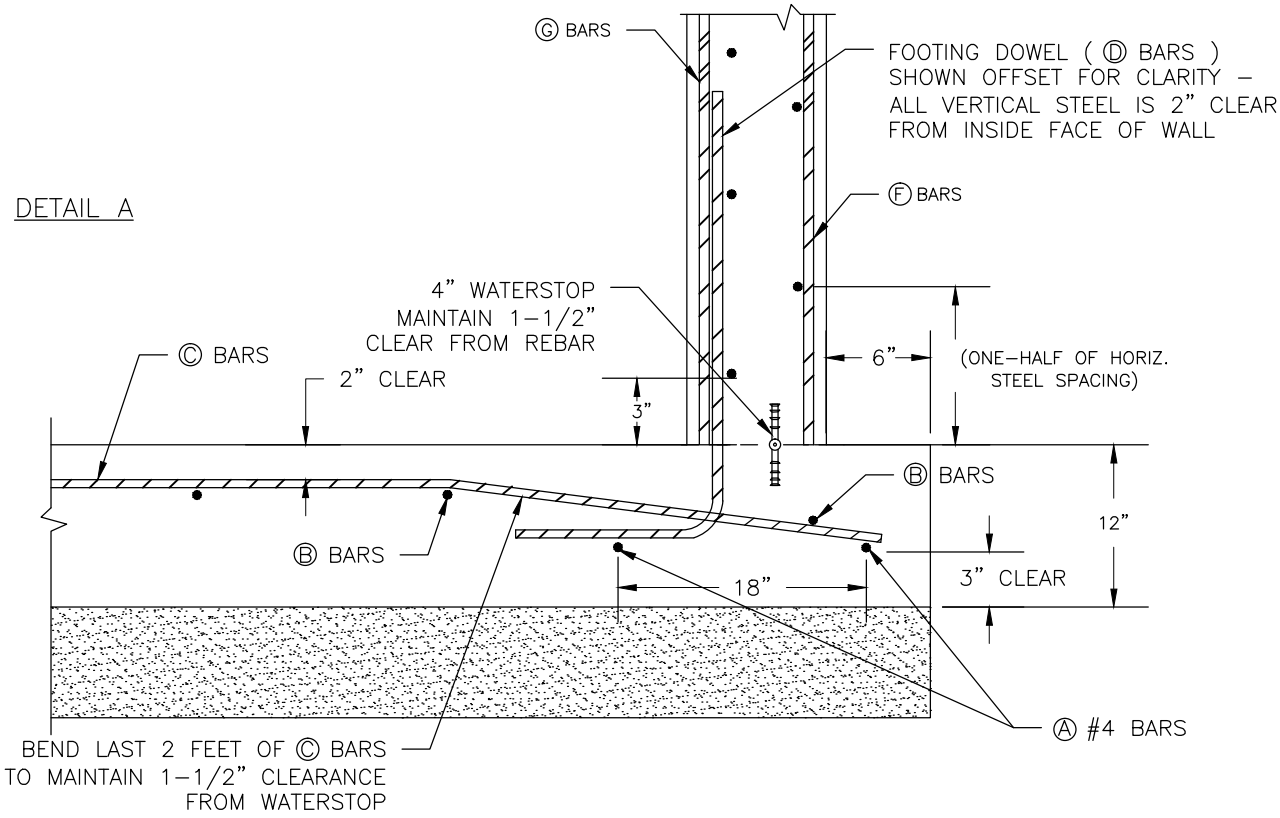

THIS STANDARDIZED DESIGN MUST BE ADAPTED TO THE SPECIFIC SITE.
THIS DRAWING WAS PREPARED AT THE NRCS STATE OFFICE,
8030 EXCELSIOR DRIVE, SUITE 200 MADISON, WI 53717–2906