Genex Farm Systems

Manure Separator Systems

Manure Solids Separation

Separation Solutions

- Volume reduction
- Odor reduction
- Reuse of solids for bedding
- Cleaning of lagoons
- Reuse of liquids for flushing
- Easier irrigation
- Nutrient reduction

FAN Press Screw Separator PSS

FAN Separator

FAN Press Screw Separator PSS
Components cross section

FAN Separator

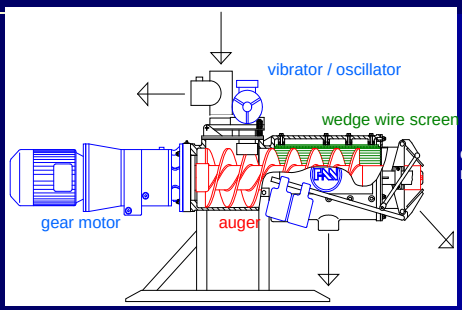

FAN Press Screw Separator PSS
Input Diagram

FAN Separator

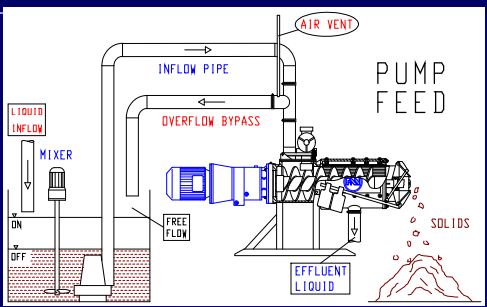

FAN Press Screw Separator PSS

Input Diagram

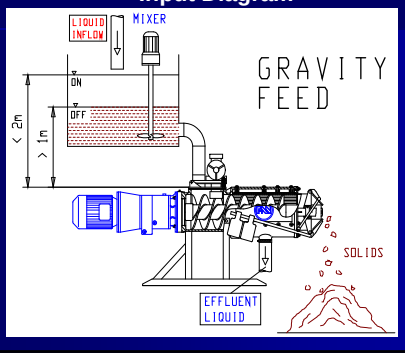

FAN Press Screw Separator PSS

Input Diagram

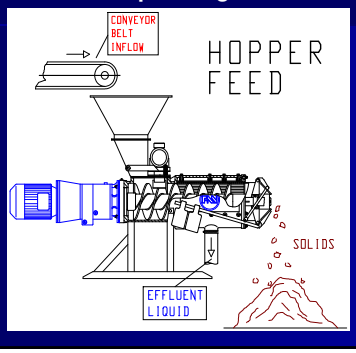

FAN Press Screw Separator PSS Installation examples

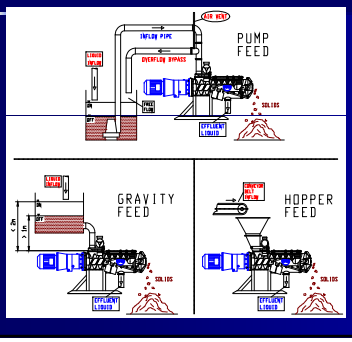

Feeding by:

Pump

Gravity

Hopper

Separator Room Layout

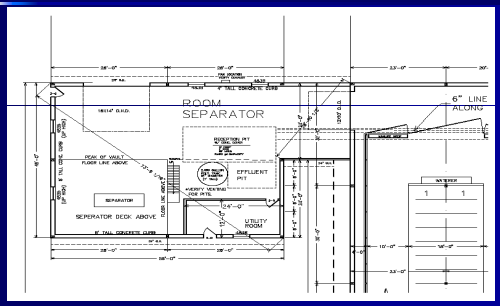

Reception Pit Layout

- Type of Operation
- Type of Animals
- Amount of Animals
- Amount of manure produced per animal per day
- Size reception pit according to the type of manure (liquid, frozen, ect.)

Sizing Reception Pits

- Size the storage for 1 ½ days
- Width x Length x Depth x 7.5 Gallons per cubic foot
- Size will vary by the different manure to be stored.
- Example: When working with frozen manure allow for extra space to agitate before processing material

Example

- 250 Cow Dairy with Holstein Cows
- w/25,000 lb. Herd Average
- 250 x 25 gallons of manure=6250 gal.
- 6250 x 1.5 days=9375 gals.
- 10'x13'x10'x7.5 gals.=9750 gals.
- This would take care of the total manure and wash water for the facility.

Single Separator Installation

Separator w/Blower

Separator w/Conveyor

Blown Manure Solids

Manure Solids Blown

Manure Solids on Conveyor

Manure Sand Separation

Reception Pit

Piston Pump

Questions ?

Thank You